ITEM	PART #	COMPONENT
1		Frame, Control Panel
	8064732	Single-Station, Standard ***(use 1065016 mfd. After 3.15.06) (use 1066079 for fallback)***
	1063902SP	Two-Station, Standard ***(use 1065221SP mfd. After 3.15.06)(use 1066082 for fallback)***
	1063903SP	Three-Station, Standard ***(use 10655018SP mfd. After 3.15.06)(use 1066086 for fallback)***
	1063904SP	Four-Station, Standard ***(use 1065019 mfd. After 3.15.06)(use 1066087 for fallback)***
	1063905	Five-Station, Standard ***(use 1065020 mfd. After 3.15.06)(use 1066089 for fallback)***
2	2105819	Bezel, Two-Controller
3	2106698	Bezel, Three-Controller
4	210046	Bezel, One-Controller
5	2105623	Bezel, Blank
6		Brace, Cabinet Top
	2005498	Single Fryer
	9007730	Two-Station
	9009430	Three-Station
	9009318	Four-Station
	2005474	Five-Station
7	2005478	Divider, Cabinet
8	2006614	Post, Cabinet Front
9	2002235	Bracket, Component Box Support
10	2006550	Post, Cabinet Rear
11	2001953	Brace, Front Cabinet
12	2006507	Support, Cross Cabinet
13	8101105	Magnet, Door
14		Manifold, Rear *(not present in single fryers)*
	8233223	Two-Station
	8234691	Three-Station
	8234693	Four-Station
	8234694	Five-Station
15	8234653	Channel, Side Base
16		Channel, Front Base
	2006616	Single Fryer ***(also used as rear base channel in single-station fryers)***
	2006623	Two-Station ***(also used as rear base channel in single-station fryers)***
	2006624	Three-Station ***(also used as rear base channel in single-station fryers)***
	2006625	Four-Station
	2006627	Five-Station
17		Channel, Rear Base
	2006626	Four-Station
	2006628	Five-Station
18	8234732	Hinge, Lower Left
19	8234733	Hinge, Lower Right ***(attach to bracket 2005478 in 3-, 4-, & 5-station fryers)***
20	8100944	Caster w/Brake, 8 1/2 to 10-inch Adjustable *(3-inch wheel)*
21	8100327	Caster w/o Brake, 8 1/2 to 10-inch Adjustable *(4-inch wheel)*
22	8090953	Bolt, 1/4-20 x 3/4-inch Hex Head
23	8090191	Washer, 1/4-inch Lock
24	8090417	Nut, 1/4-20 Flange

2.4 Controllers

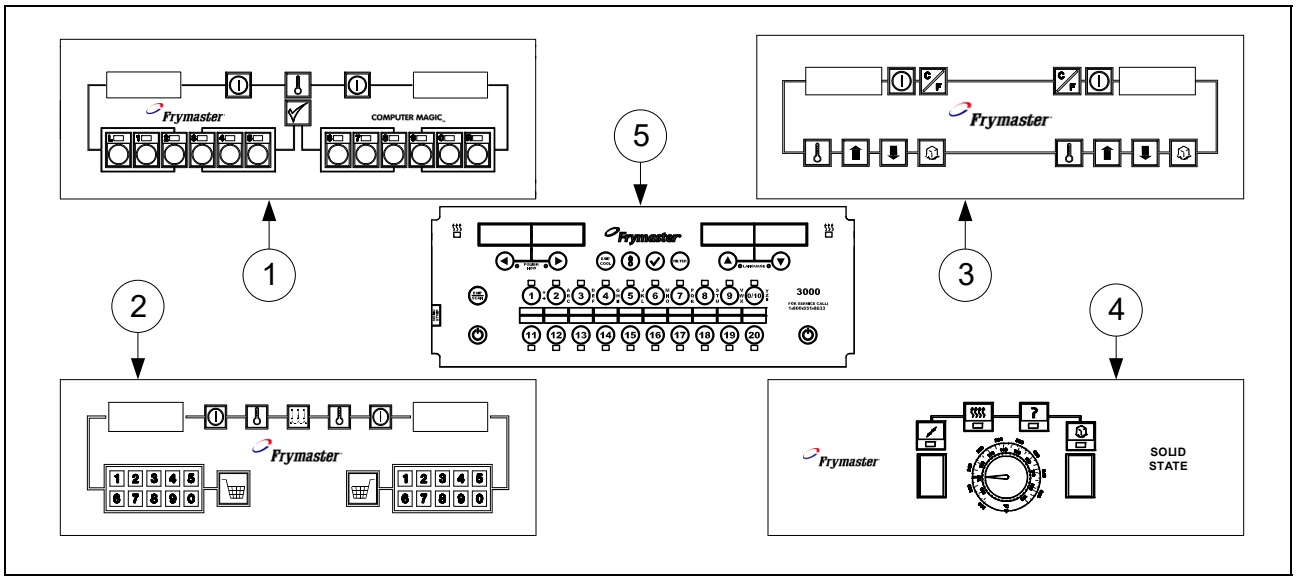

ITEM	*Standard PART #	*Euro-Look PART #	COMPONENT
1			Computer Magic III.5
	1061151SP	1063446	Dual-vat (Domestic U.S.)
	1061187SP	1063447	Dual-vat (CE) ***(use 1063450 for 8-second MC Non-CE export units)***
	1061150SP	1063445	Full-vat (Domestic U.S.)
	1061188SP	1063448	Full-vat (CE) ***(use 1063449 for 8-second MC Non-CE export units)***
2			Basket Lift Timer
	1062074SP	1063580	Dual-vat (Domestic U.S.)
	1062081SP	1063496	Dual-vat (CE) ***(use 1063497 for 8-second MC Non-CE export units)***
	1062073SP	1063504	Full-vat (Domestic U.S.)
	1062080SP	1063495	Full-vat (CE) ***(use 1063498 for 8-second MC Non-CE export units)***
3			Digital Controller
	1061510	1063492	Dual-vat (Domestic U.S.)
	1061506	1063494	Dual-vat (CE) ***(use 1063499 for 8-second MC Non-CE export units)***
	1061509SP	1063503	Full-vat (Domestic U.S.)
	1061505SP	1063493	Full-vat (CE) ***(use 1063500 for 8-second MC Non-CE export units)***
4			Solid State (Analog) Controller ***(controller knob is 8100387)***
	8063008	1063375	Dual-vat (Domestic U.S.) ***(use 1063398 for Foodmaker units)***
	8063564	1063572	Dual-vat (Non-CE Export) ***(not available for CE Units)***
	8063006E	1063369	Full-vat (Domestic U.S.) ***(use 1063364 for Foodmaker units)***
	8063563	1063501	Full-vat (Non-CE Export) ***(not available for CE Units)***
*		8064323	Fallback Controller Assembly, Dual-vat
*		8069224	Fallback Controller Assembly, Full-vat
*		2105623	Blank Panel ***(for fryers with remote mounted computers)***
*		8062071	15-pin Wiring Harness, Computer-to-Interface Board
*		1061226	Remote Computer, Burger King
*		8063528	Internal Cable, 7 1/2-feet
*		8063531	Internal Cable, 12 1/2-feet
*		8063388	External Cable, 20-feet
5		1082169SP	K3000 Controller H-55

* Not illustrated.

* Pro H50/55-Series cabinets were manufactured with standard cabinets with the 90°-edge topcap and the Euro-Look cabinets with the rounded topcap. The Euro-Look cabinets also have a separate bezel. The computers that fit the appropriate cabinet are not interchangeable.

2.5 Drain, Filtration, and Oil Return System Components

2.5.1 Filtration System Components

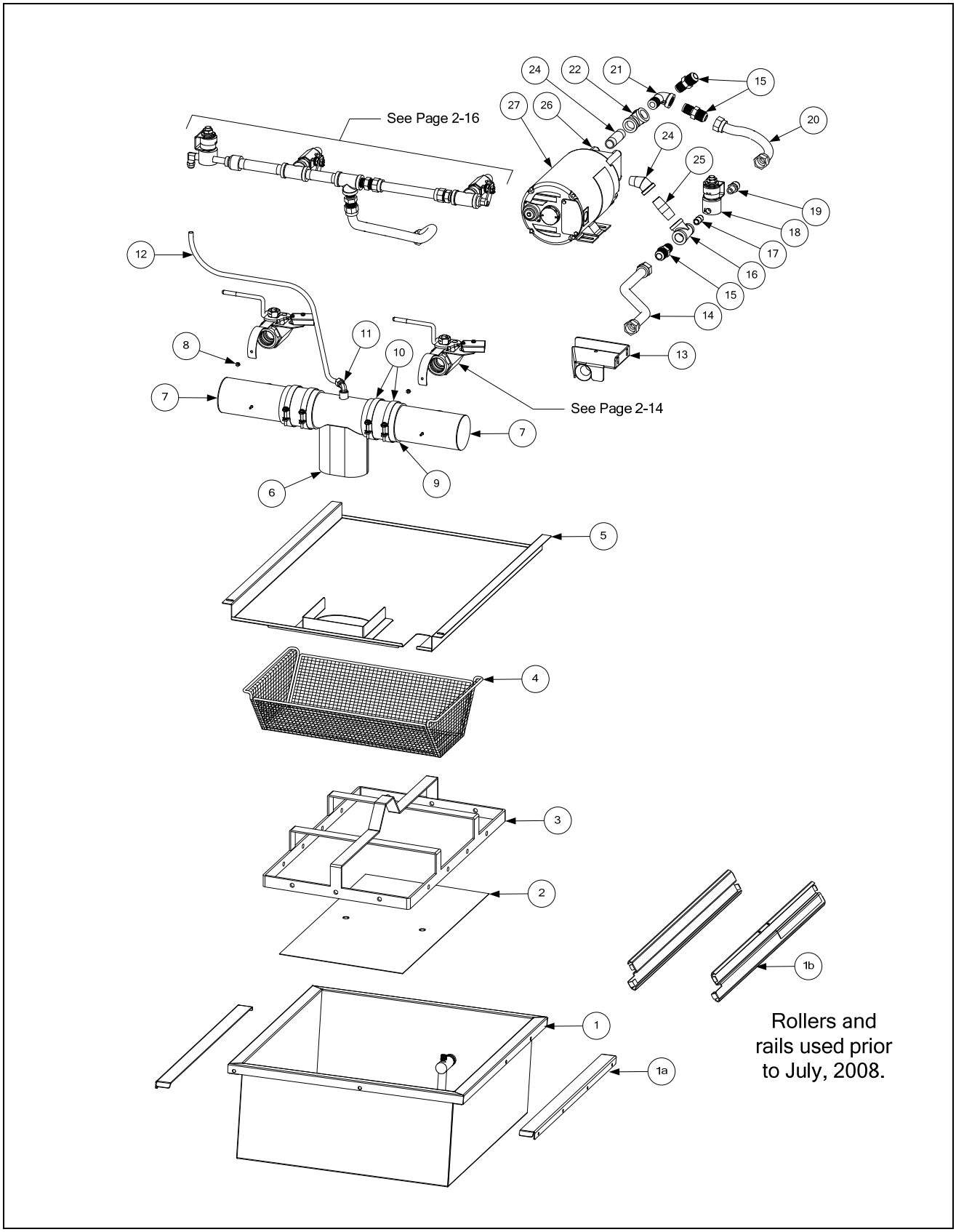

ITEM	PART #	COMPONENT
1	1080181SP	Filter Pan, Slide-type, FootPrint Pro *(after July, 2008; includes plug and o-rings)*
	8130568	Plug, 1/8-inch NPT Socket Head
	8160596	O-Ring *(two required)*
*	8261980	Filter Pan, Roller-type, FootPrint Pro *(prior to July, 2008; includes next 4 items)*
	8130568	Plug, 1/8-inch NPT Socket Head
	8160012	O-Ring *(two required)*
	8102198	Roller, Filter Pan *(See **NOTE** at bottom of page.)*
	8090059	Nut, 1/4-20 Hex Flange *(See **NOTE** at bottom of page.)*
1a	2203879	Filter Pan Rail, Slide-type *(after July, 2008)*
1b	8262603	Filter Pan Rail, Roller-type *(prior to July, 2008; includes one left and one right)*
2	2002124	Screen, Sana Grid
3	8102091	Ring, Filter Paper Hold-Down Ring *(13.47-inch X 21.41-inch)*
4	8235146	Tray, Filter Pan Crumb
5	8234662	Lid, Filter Pan
6		Tube, 3-inch Center Drain
	8234678	Open Both Ends
	8234708	Closed One End
7		Tube, 3-inch Round Drain (8234625 illustrated)
	8234638	Dual Vat, Long *(one end closed)*
	8234640	Dual Vat, Long *(open both ends)*
	8234624	Dual Vat, Short *(one end closed)*
	8234642	Dual Vat, Short *(open both ends)*
	8234639	Full Vat, Long *(one end closed)*
	8234641	Full Vat, Long *(open both ends)*
	8234625	Full Vat, Short *(one end closed)*
	8234643	Full Vat, Short *(open both ends)*
	2006473	Spreader, Long *(open both ends, no drain valve connection)*
	2006474	Spreader, Short *(open both ends, no drain valve connection)*
8	8090247	Nut, 8-32 Hex Keps
9	8160625	Sleeve, Round Drain Connector
10	8090969	Clamp, Round Drain Sleeve
11	8102493	Elbow, 1/4-inch NPT X 90° Tube Compression
12	8111071	Tube, 1/4-inch OD Teflon Manifold Vent
13	8233879	Suction Tube, FootPrint Pro Female
14	8101055	Flexline, 5/8-inch OD X 11.50-inch
15	8101668	Adapter, 5/8-inch OD X 1/2-inch Male
16	8130530	Tee, 1/2-inch X 1/2-inch X 1/4-inch Reducing
17	8130838	Nipple, 1/4-inch NPT Close
18	1067598SP	Solenoid Valve w/Female Pins
19	8102773	Adapter, 1/4-inch NPT to 1/2-inch NPT
20	8101067	Flexline, 5/8-inch OD X 8.50-inch
21	8130165	Elbow, 1/2-inch NPT X 90° Street
22	8130003	Tee, 1/2-inch NPT
23	8130265	Nipple, 1/2-inch NPT X 2.50-inch
24	8130342	Elbow, 1/2-inch NPT X 45° Street
25	8130298	Nipple, 1/2-inch NPT X 2.00-inch
26	8263191	Pump and Gasket Kit *(for gasket only, order P/N 8160093)*
27		Motor and Gasket Kit, 50/60 Hz *(for gasket only, order P/N 8160093)*
	8261785	100V
	8261712	115V
	8261756	208V
	8261757	220-240V
	8261755	250V
*	1060675	Plumbing Assembly *(used with rear flush, page 2-19)*

* Not illustrated. **NOTE:** Kit 8261979 contains four each of roller 8102198 and 1/4-20 Flange Nut 8090059.

2.5.2 Drain Valves and Associated Components

Non-Filter Drain Valve Assemblies

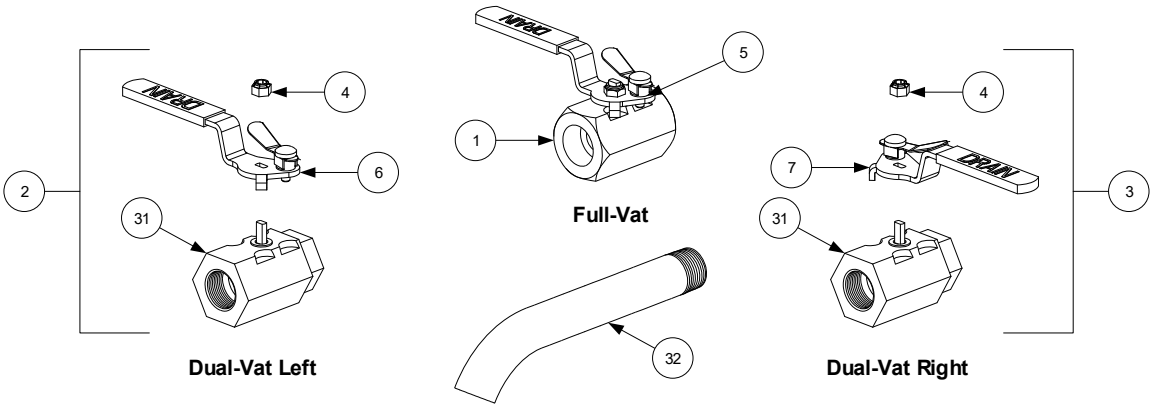

FootPrint and Filter Magic Drain Valve Assemblies

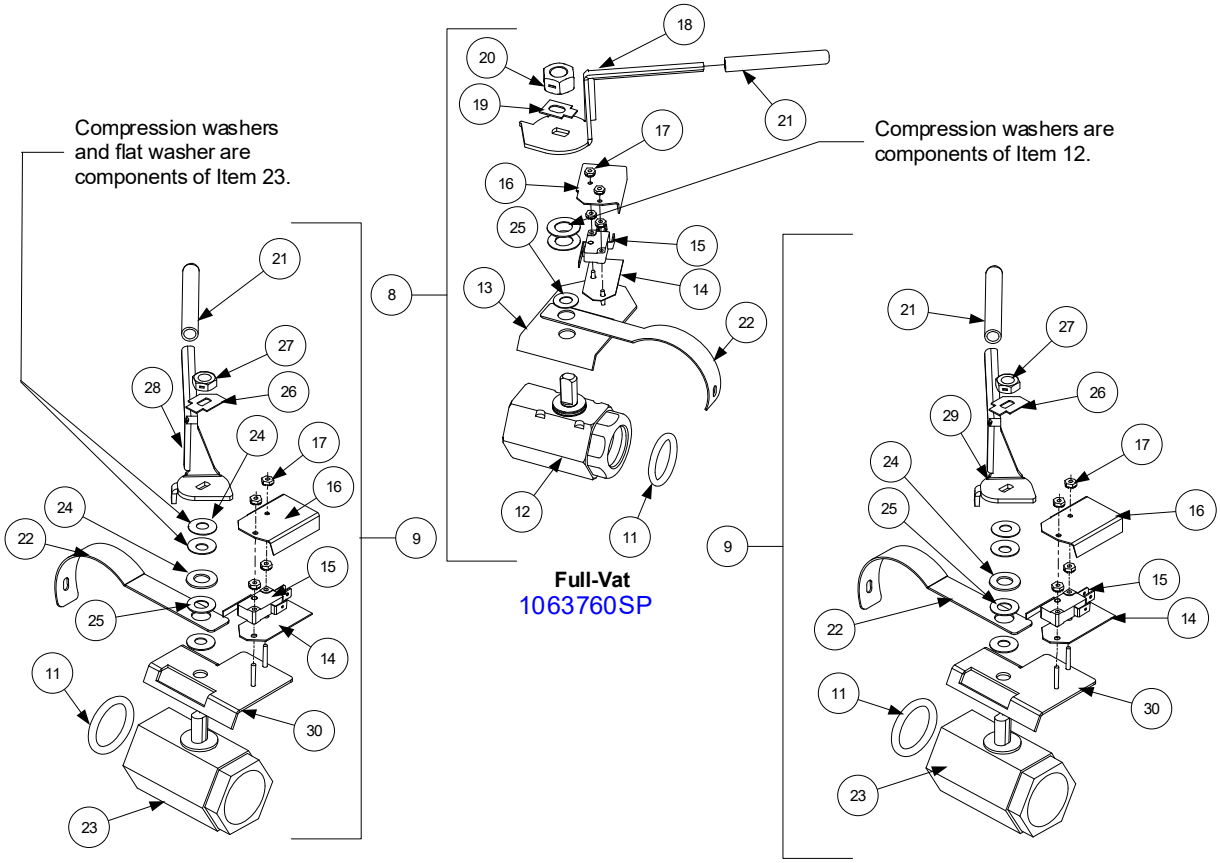

ITEM	PART #	COMPONENT
1	8101569	Valve Assembly, 1.25-inch Full-Vat Non-Filter Drain (includes handle)
*	8101427	Lock Pin Handle for 1.25-inch Valve Assembly
2	8067915SP	Valve Assembly, 1-inch Left Dual-Vat Non-Filter Drain (complete assembly)
3	8067916SP	Valve Assembly, 1-inch Right Dual-Vat Non-Filter Drain (complete assembly)
4	8090589	Nut, ½-13 2-Way Lock (used on non-filter drain valves)
5	8101427	Handle w/Lock Pin, Full Vat
6	8101568	Handle w/Lock Pin, Left Drain Valve Dual Vat
7	8101567	Handle w/Lock Pin, Right Drain Valve Dual Vat
8	1063760SP	Valve Assembly, 1.25-inch Full-Vat w/Filter Drain (complete assembly)
9	1065607SP	Valve Assembly, 1-inch Left Dual-Vat w/Filter Drain (complete assembly)
10	1065606SP	Valve Assembly, 1-inch Right Dual-Vat w/Filter Drain (complete assembly)
11	8160135	O-Ring, Drain Valve
12	8101018	Valve, 1.25-inch Drain
13	8068137	Bracket Assembly, Drain Safety Switch
14	8160220	Insulation, Drain Safety Switch
15	8072103	Microswitch, Lever Activated
16	9012348	Cover, Drain Safety Switch
17	8261366	Nut, 4-40 Hex Keps (Pkg. of 25)
18	8241602	Handle, Full-Vat Drain Valve
19	9002936	Retainer, Full-Vat Drain Valve Nut
20	8090540	Nut, ½-13 2-Way Lock
21	8160639	Grip, Drain Valve Handle
22	2006496	Support, 3-inch Drain Tube
23	8101114	Valve, 1-inch Dual-Vat w/Filter Drain
24	8090196	Washer, ⅜-inch Flat
25	8101165	Washer, ⅜-inch Teflon
26	9002934	Retainer, Dual-Vat Drain Valve Nut
27	8090539	Nut, ⅜-16 2-Way Lock
28	8241637	Handle, Left Dual-Vat Drain Valve
29	8241636	Handle, Right Dual-Vat Drain Valve **(Must order item 16 and item 30 to fit)**
30	1062671	Bracket Assembly, Dual-Vat Drain Safety Switch
31	8101338	Valve, 1-Inch Dual-Vat Non-Filter Drain
32		Drain Valve Extension
	8121226SP	Full-Vat (1.25-inch)
	8121227	Dual-Vat (1-inch)

2.5.3 Oil Return Line Components

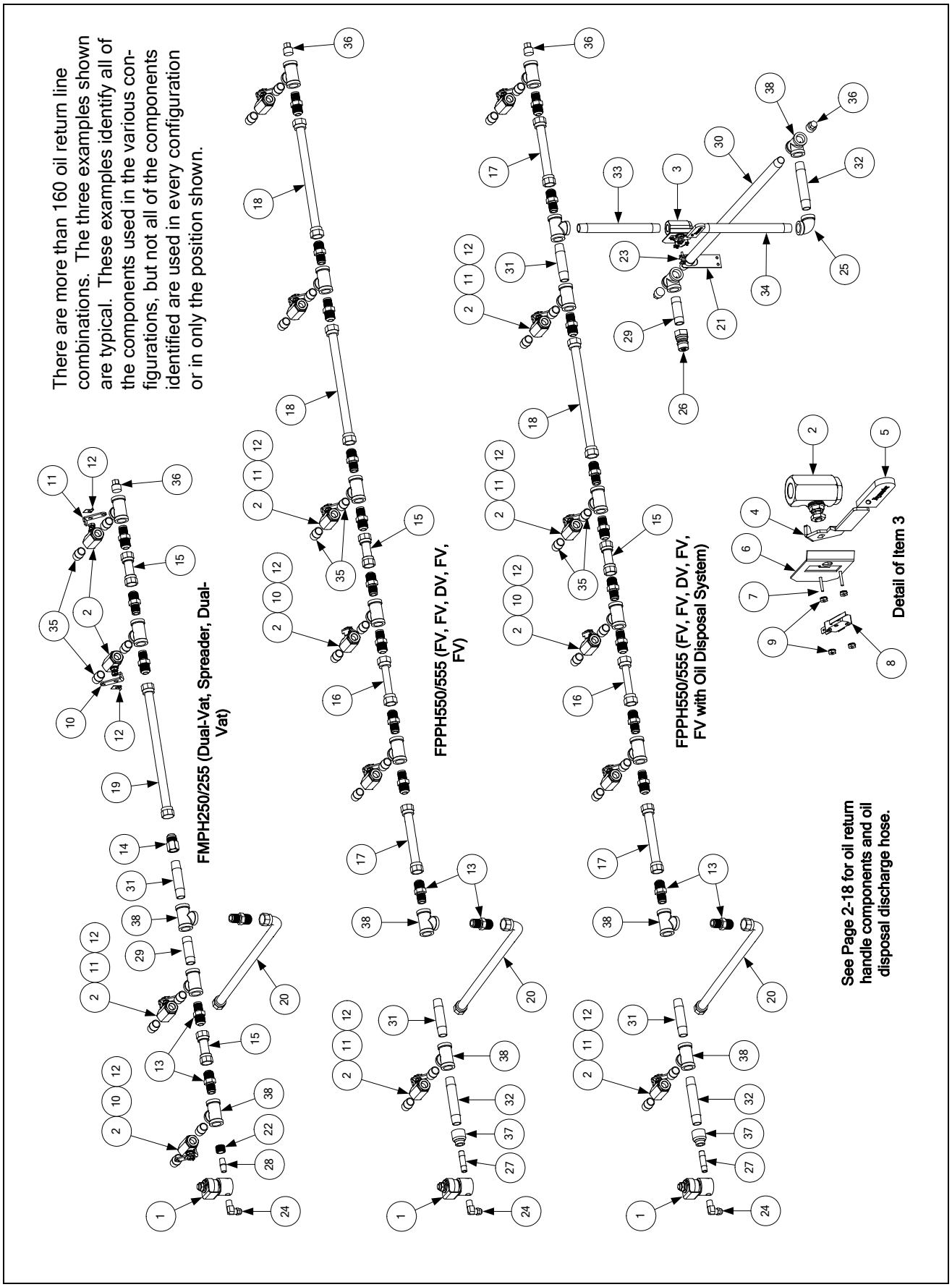

ITEM	PART #	COMPONENT
1	8072484	Valve, 1/4-inch NPT Solenoid
2	8100278	Valve, 1/2-inch NPT Ball
3	8068762SP	Valve Assembly, Microswitch and Ball
4	9005953	Handle, Oil Discharge Valve
5	8140047	Sleeve, Red Handle
6	9008057	Mount, Microswitch
7	8090354	Screw, 4-40 X 3/4-inch Slotted Round Head
8	8072103	Microswitch, Lever Activated
9	8090237	Nut, 4-40 Keps Hex
10	2015721	Arm, Left Dual-vat Oil Return Valve
11	2025721	Arm, Right Dual-vat or Full-Vat Oil Return Valve
12	9002935	Retainer, Oil Return Valve Nut
13	8101668	Adapter, Flexline to 1/2-inch NPT Male
14	8101669	Adapter, Flexline to 1/2-inch NPT Female
15	8101160	Flexline, 3.00-inch
16	8101339	Flexline, 4.50-inch
17	8101680	Flexline, 6.50-inch
18	8101055	Flexline, 11.50-inch
19	8101057	Flexline, 13.00-inch
20	8101400	Flexline, 21.00-inch
21	9100889	Bracket, Oil Discharge Plumbing
22	8130304	Bushing, 1/2-inch to 1/4-inch NPT Reducer
23	8090951	Clamp, 1/2-inch Hose
24	8101372	Fitting, 1/4-inch HPTF X 3/8-inch Tube 90°
25	8130062	Elbow, 1/2inch NPT 90°
26	8100487	Fitting, Male Quick-Disconnect
27	8130537	Nipple, 1/4-inch NPT X 2.00-inch
28	8130077	Nipple, 1/4-inch NPT X Close
29	8130265	Nipple, 1/2-inch NPT X 2.50-inch
30	8130541	Nipple, 1/2-inch NPT X 25.50-inch
31	8130247	Nipple, 1/2-inch NPT X 3.50-inch
32	8130251	Nipple, 1/2-inch NPT X 4.50-inch
33	8130320	Nipple, 1/2-inch NPT X 8.00-inch
34	8130275	Nipple, 1/2-inch NPT X 9.00-inch
35	8130022	Nipple, 1/2-inch NPT X Close
36	8130156	Plug, 1/2-inch NPT Pipe
37	8130555	Reducer, 1/2-inch to 1/4-inch NPT Bell
38	8130003	Tee, 1/2-inch NPT

2.5.4 Oil Return Handle, Oil Disposal and Disposal Hose Components

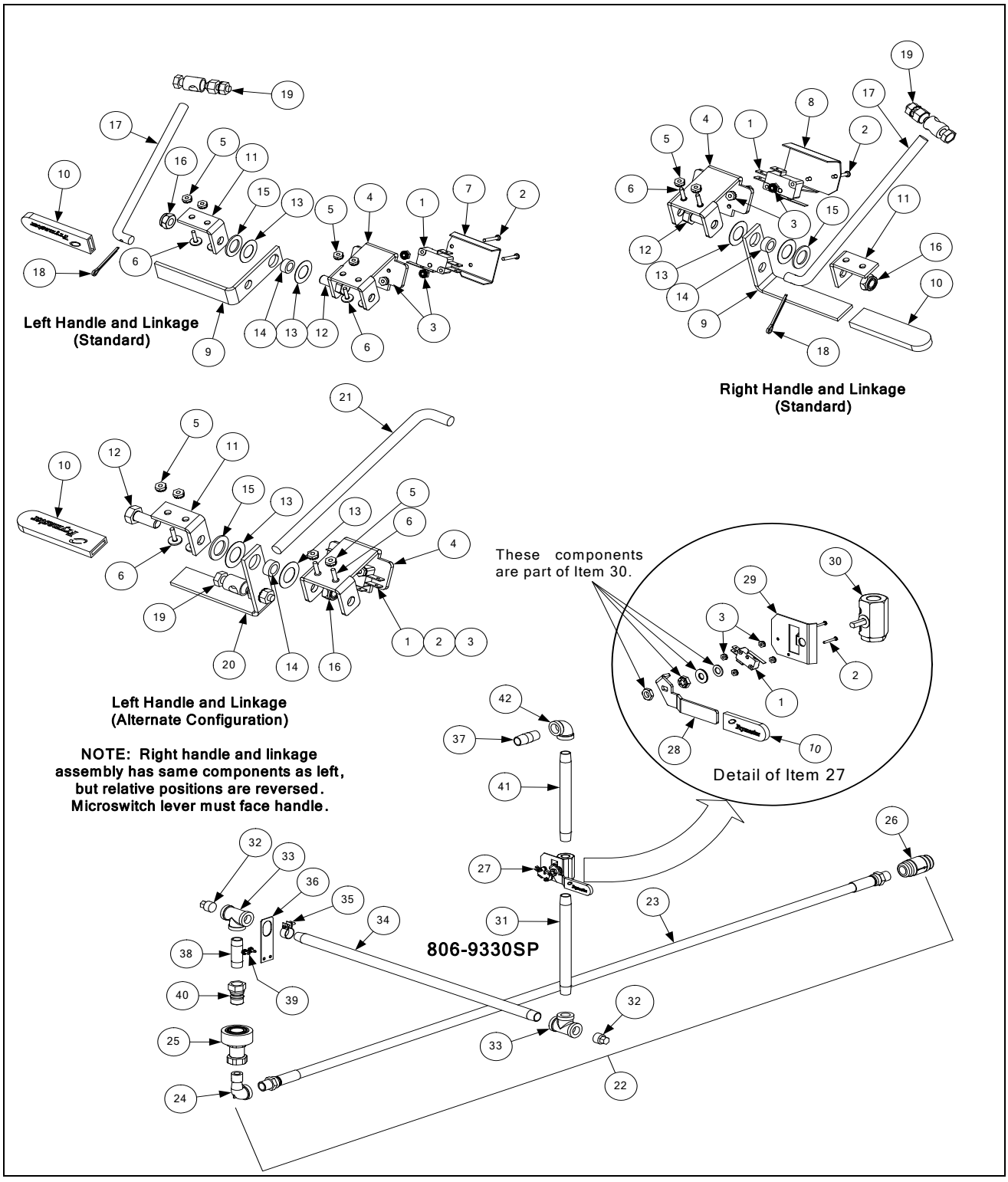

ITEM	PART #	COMPONENT
1	8072103	Microswitch, Lever Activated
2	8261359	Screw, 4-40 X 3/4-inch Slotted Round Head
3	8090237	Nut, 4-40 Hex Keps
4	2000821	Bracket, Handle
5	8090247	Nut, 8-32 Hex Keps
6	8261363	Screw, 8-32 X 1/2-inch Slotted Truss Head (pkg. of 25)
7	9012358	Cover, Left Handle Microswitch
8	9022358	Cover, Right Handle Microswitch
9	2002437	Handle, Oil Return *(use in standard configurations, see example – page 2-17)*
10	8140047	Sleeve, Red Handle
11	8101999	Bracket, Oil Return Handle
12	8090142	Bolt, 5/16-24 X 3/4-inch Hex Head
13	8090203	Washer, 1/2-inch Flat Nylatron
14	8100220	Spacer, .493-inch X .200-inch Tubular
15	8090200	Washer, 1/2-inch Flat Steel
16	8090056	Nut, 5/16-24 Hex Lock
17	2002438	Rod, Oil Return Linkage *(use in standard configurations, see example – page 2-17)*
18	8100783	Cotter Pin
19	8100285	Swivel, Valve Control
20	9200831	Handle, Oil Return *(use in alternate configurations, see example – page 2-17)*
21	9100632	Rod, Oil Return Linkage *(use in alternate configurations, see example – page 2-17)*
22	8069178SP	Hose Assembly, Oil Discharge *(Items 23-26)*
23	8101434	Hose Assembly, 66-inch Oil
24	8130165	Elbow, 1/2-inch X 90° Street
25	8100490	Quick-Disconnect Fitting, 1/2-inch Female
26	8100667	Check-Valve, 1/2-inch
*	8069330SP	Oil Disposal Plumbing Assembly (rear discharge configuration)H50 Oil Return
27	8068762SP	Ball Valve with Microswitch Assembly
28	9005953	Handle, Oil Disposal Mounting
29	9008057	Bracket, Microswitch Mounting
30	8100278	Valve, ½-inch Gemini (without handle)
31	8130275	Nipple, ½-inch x 9-inch
32	8130463	Plug, ½-inch Pipe Counter Sink
33	8130003	Tee, ½-inch x ½-inch x ½-inch
34	8130607	Nipple, ½-inch x 23½-inch
35	8090951	Clamp, Hose (limits movement of plumbing through mounting bracket)
36	9108809	Bracket, Oil Disposal Mounting (rear connection configuration)
37	8130298	Nipple, ½-inch x 2-inch
38	8130265	Nipple, ½-inch x 2 ½ -inch
39	8261374	Screw, #10 x ½-inch Hex Head (Pkg. of 25)
40	8100487	Quick Disconnect, ½-inch Male
41	8130320	Nipple, ½-inch x 8-inch
42	8130062	Elbow, ½-inch x 90º
*	8262113	Kit, FMP/FPPH50 Rear Disposal Kit (Three or more vats/spreaders only)

2.5.5 Oil Disposal Wand Assembly

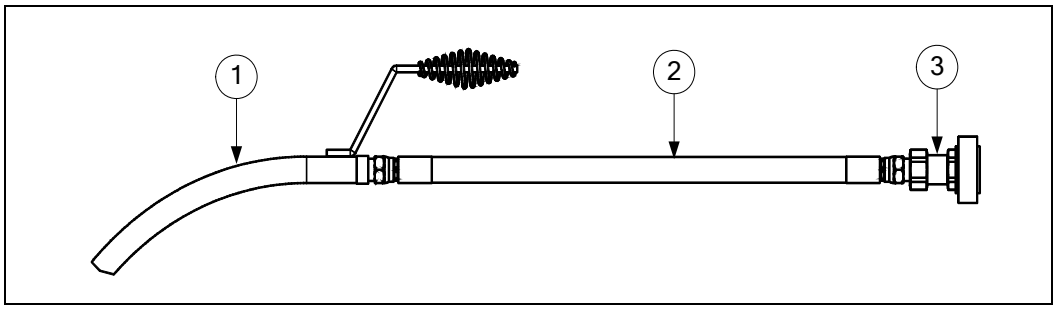

ITEM	PART #	COMPONENT
	8067459	Assembly, Oil Disposal Wand
1	8100603	Wand, FB Filter
2	8101471	Hose, 24 FPH50/55
3	8100490	Quick Disconnect, ¼-inch Female

2.5.6 Assembly Wand Plumbing (Japan)

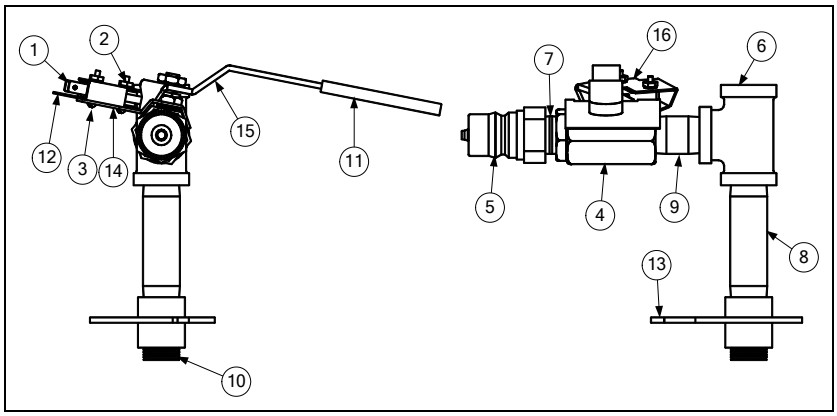

ITEM	PART #	COMPONENT
	8069700SP	Plumbing Assembly, Japan Wand
1	8072103	Switch, CE Micro
2	8261366	Nut, 4-40 (Pkg. of 25)
3	8261359	Screw, 4-40 x ¾ (Pkg. of 25)
4	8100278	Valve, ½-inch Ball
5	8100487	Coupling, Male
6	8130003	Tee, ½ x ½ x ½
7	8130002	Nipple, ½ x Close NPT
8	8130156	Plug, ½ NPT
9	8130247	Nipple, ½ x 3½-inch NPT
10	8130298	Nipple, ½ x 2-inch NPT
11	8140047	Sleeve, Handle Valve Red w/ Logo
12	8160220	Insulation, RF Switch
13	8232029	Support, Oil Return
14	9001862	Bracket, Microswitch Mounting ½ Ball Valve
15	9002839	Handle, Valve Wand Japan
16	9002849	Cover, Wand Microswitch Japan

2.5.7 Rear Flush Oil Return Components

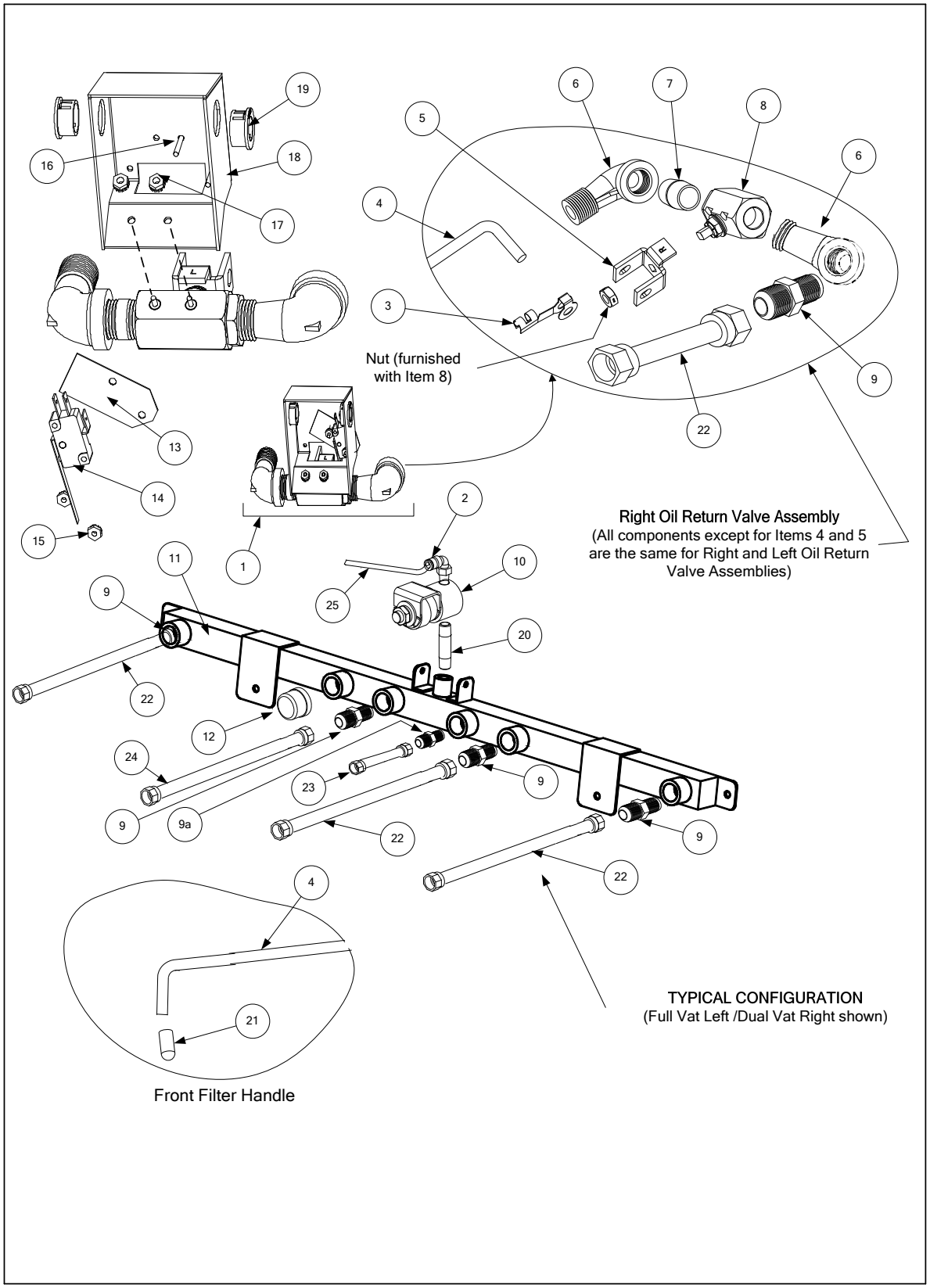

ITEM	PART #	COMPONENT
1		Valve Assembly, Microswitch and Ball Valve
	1063452	Valve, Rear Flush Assembly, Left Side
	1063453	Valve, Rear Flush Assembly, Right Side
2	8102493	Elbow, 90º x ¼-inch NPT x ¼-inch Tube
3	8090601	Clip, Rod End Clevis
4		Shaft, Rear Flush Valve
	2116701	For use in ***Left*** oil return valve assemblies
	2126701	For use in ***Right*** oil return valve assemblies
5		Handle, Rear Flush Valve
	9012772	For use in ***Left*** oil return valve assemblies
	9022772	For use in ***Right*** oil return valve assemblies
6	8130165	Elbow, 90º x ½-inch Street
7	8130087	Nipple, 1 ½-inch BM NPT
8	8102201	Valve, ½-inch Ball
*	9002935	Oil Return Valve Nut Retainer
9	8101668	Adapter, ⅝-inch Flexline to ½-inch NPT Male
9a	8102786	Adaptor, ½ -inch Flare x ½ -inch NPT
10	8072484	Valve, ¼-inch NPT Solenoid Vent
11		Manifold Rear Flush Oil Return
	8102890	Two-Station Fryer
	8102891	Three-Station Fryer
	8102892	Four-Station Fryer
	8102893	Five-Station Fryer
12	8130156	Cap, ½-inch Pipe
13	8160220	Insulation, Rear Flush Switch
14	8074101	Microswitch, Lever Activated
15	8261366	Nut, 4-40 Keps Hex (Pkg. of 25)
16	8261359	Screw, 4-40 x ¾-inch Slotted Round Head (Pkg. of 25)
17	8090250	Nut, 6-32 Keps Hex
18	2008745	Cover, Microswitch Rear Flush
19	8070125	Bushing, .50 ID Heyco SB-750-8 Nylon
20	8130700	Nipple, ¼-inch NPT x 3-inch
21	8160643	Grip, Oil Return Handle
22	8101067	Flexline, ⅝-inch OD x 8.5-inch Oil Return
23	8102787	Flexline, ½-inch x 5-inch Oil Return Manifold to Pump
24	8101055	Flexline, ⅝-inch OD x 11½-inch Oil Return Manifold to Pump
25	8111071	Tube, ¼-inch OD Teflon Manifold Vent

2.5.8 Power Shower Assemblies (Optional)

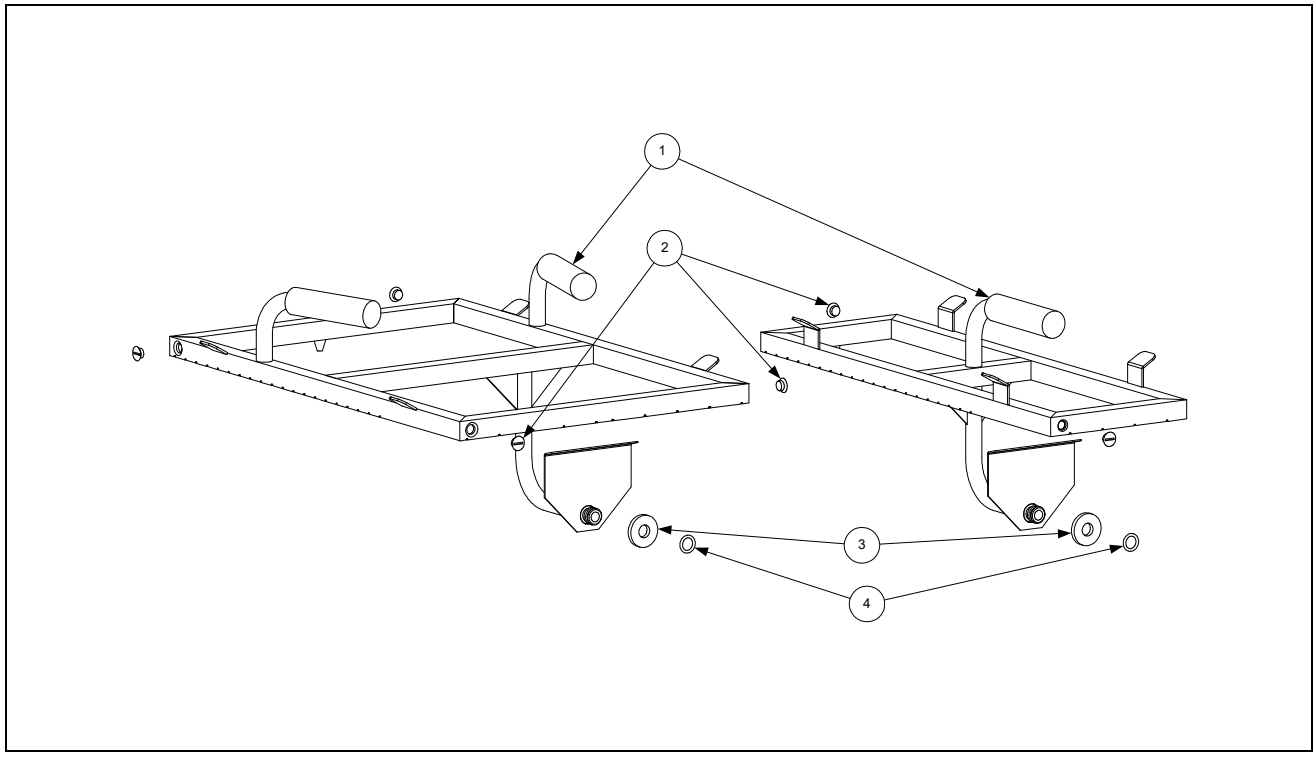

ITEM	PART #	COMPONENT
	8064442SP	**Power Shower Assembly, Full-vat, Complete**
	8064476SP	**Power Shower Assembly, Dual-vat, Complete**
1	8140001	Grip, Handle
2	8090415	Screw, Cleanout
3	8261390	Seal *(Gasket)* (pkg. of 5)
4	8261344	O-Ring (pkg. of 5)

2.6 Electronics and Electrical Components
(for Controllers, Page 2-10)

2.6.1 Component Boxes

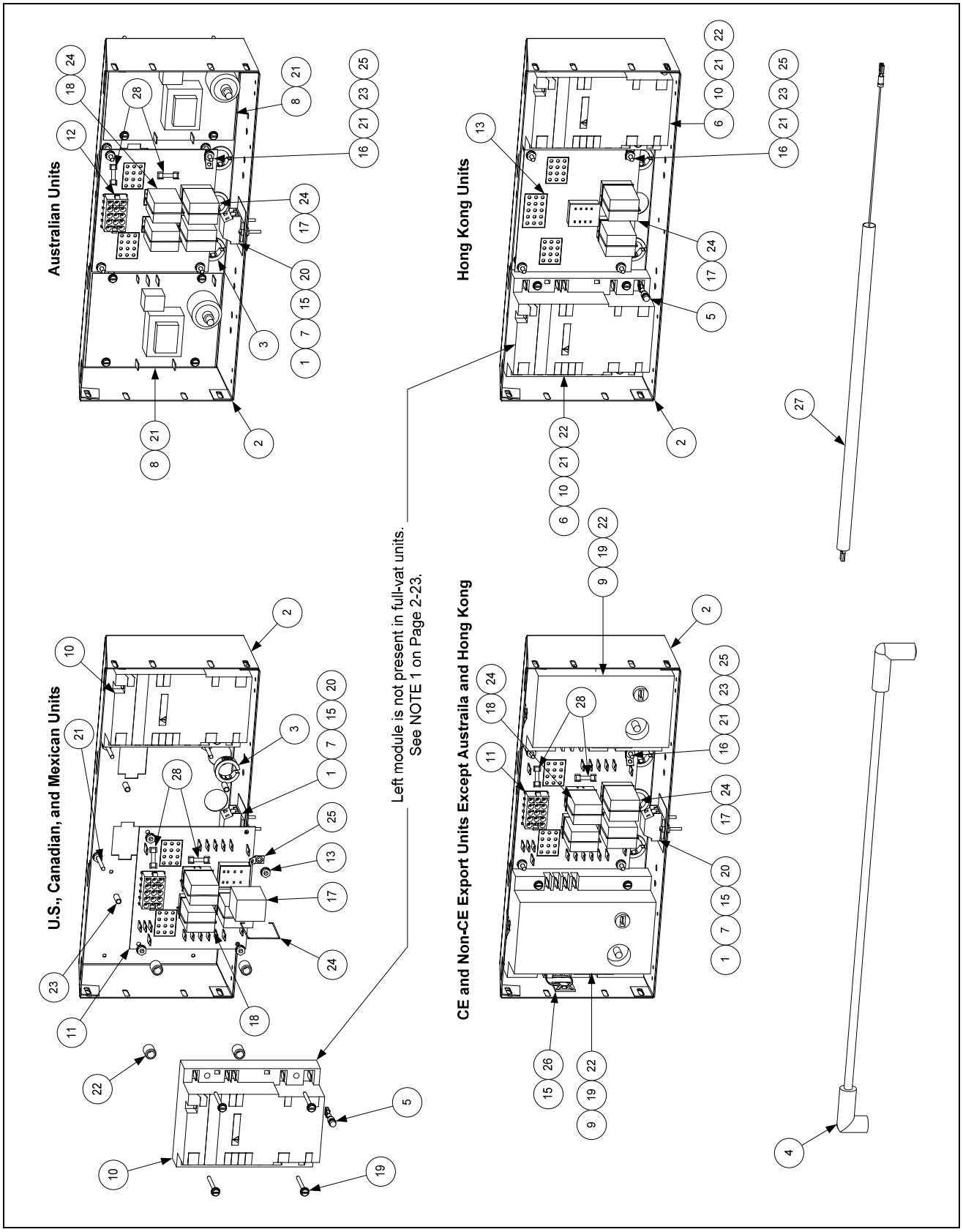

ITEM	PART #	COMPONENT
1	8101164	Block, One-Piece Screwless Terminal
2	2005996	Box, One-Piece Component
3	8071926	Bushing, .875-inch Split
4	8262024	Cable, 21-inch Ignition *(comes with Rajah connector [Item 5])*
5	8073484	Connector, Rajah
6	1060531SP	Fuse Assembly, Inline
7	8160217	Insulation, Terminal Block Paper
8	8072971	Ignition Module, Australian ***prior to 04/2021***
	8076382	Ignition Module, Australia/NZ 3 sec. FV Left, DV Fenwal ***04/2021 to current***
	8076383	Ignition Module, Australia/NZ 4 sec. FV Right Fenwal ***04/2021 to current***
9	8071006	Ignition Module, CE and Non-CE export *(except Australia, Canada, HK, Mexico)*
10	8073366†	Ignition Module, Dual-Spark Full-vat *(U.S., Canadian, HK, and Mexican units)*
	8073365†	Ignition Module, Single-Spark Ignition Module Dual-vat *(U.S., Canadian, HK, and Mexican units)*
	8075949	Ignition Module, Single Spark Fenwal
11	8262264	Interface Board Kit; U.S., CE and non-CE *(except Hong Kong)*
	1066706	Interface Board SMT, U.S., CE and non-CE *(except Hong Kong)*
	8074330	Sound Device/Speaker Adapter Harness SMT
	8074343	Wire Harness, SMT Interface Board to Ignition Module
*	1066711	Interface Board, Fast Computer
12	1060387	Interface Board, Australian ***prior to 04/2021***
	8080014	Interface Board, **GIVEG** Australia/NZ ***04/2021 and after (use harness 8076370)***
13	8064973	Interface Board, Hong Kong
14	8071359	Mount, Ty-Wrap
15	8070833	Relay, DPDT 5A 12VDC Latch/Heat *(See **NOTE 1**)*
16	8070834	Relay, SPDT 15A 12VDC Basket Lift *(See **NOTE 2**)*
17	8261346	Spacer, Ignition Module (Pkg. of 10)
18	8102763	Spacer, Interface Board
19	8102243	Spring, Relay Retaining
20	8261337	Tab, 1/4-inch Terminal (Pkg. of 5)
21	8071948	Ty-Wrap
22	8066085	Wire Assembly, Ignition Module
23	8073843	Fuse 3A 250V Domestic
	8073293	Fuse 5A 125V **International Only**
*	8261721	Ignition Cable *(2 ignition cables, 2 rajah connectors)*
*	8071200	Ignition Wires, 27-inch *(used with 8071006)*
*	8071878	Ignition Wires, 19-inch *(used with 8071006)*
*	8075986	Harness, Fenwal Module FV
*	8075987	Harness, Fenwal Module DV
*	1088328	Wire Assy, Flame Sense ***(used with 8076382 and 8076383)***
*	8063660	Sound Device, High Output (use 8103141 for SMT sound device with SMT connector)

* Not illustrated.

† For dual-vat units, use 8073365 Single-Spark Ignition Module (see **NOTE 1**).

NOTE 1: U.S., Canadian, Hong Kong, and Mexican units use two different modules depending upon the configuration of the frypot. Dual-vat units use two 8073365 Single-Spark Ignition Modules. Full-vat units use one 8073366 Dual-Spark Ignition Module. Also, in full-vat units, only one latch relay (Item 17) is used, located in the lower right socket.

NOTE 2: Basket Lift Relays (Item 18) are present only on units equipped with basket lifts.

2.6.2 Transformer Boxes

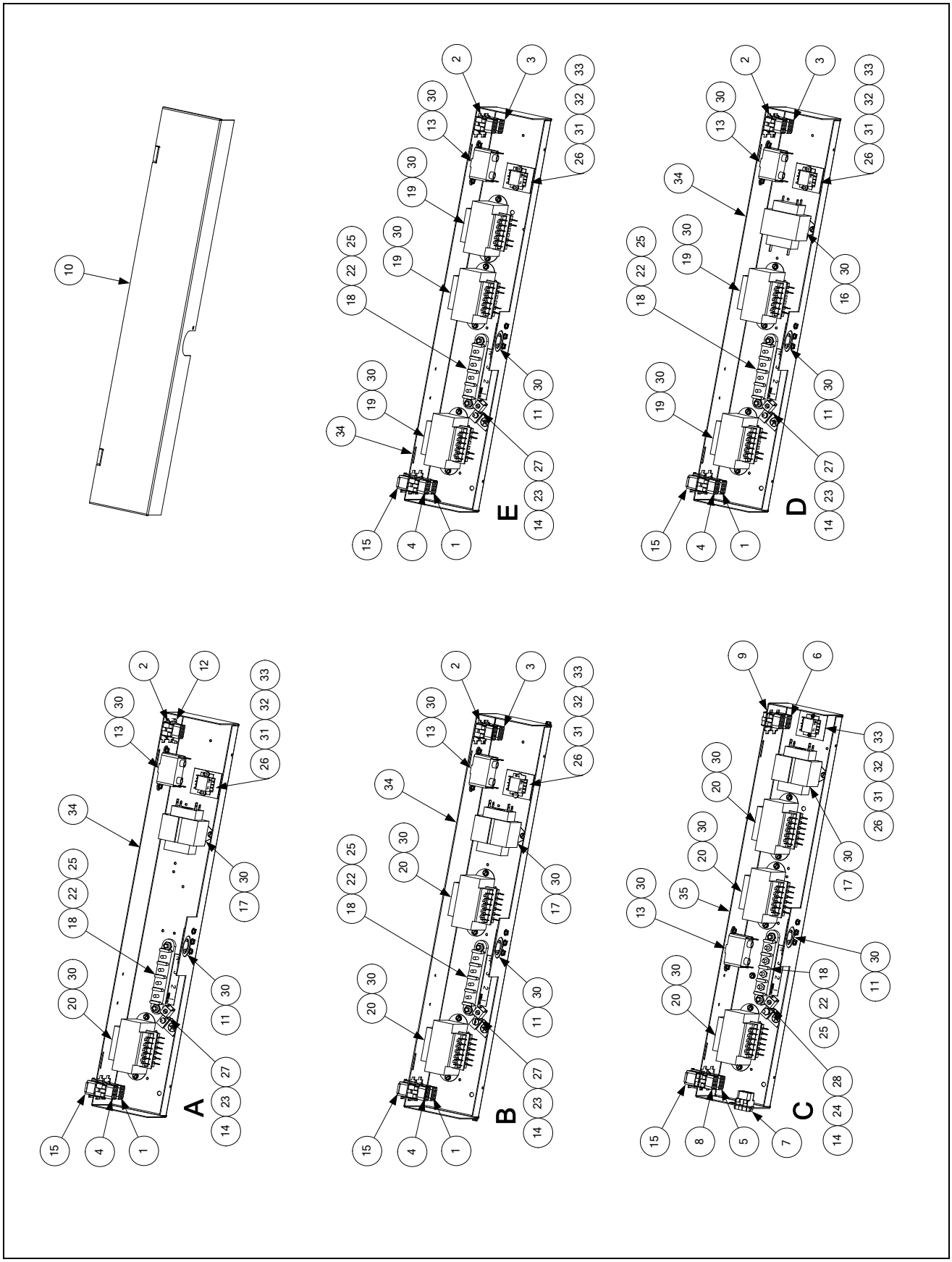

ITEM	PART #	COMPONENT
		Box Assembly, Transformer
A	1061380SP	100-120V FMPH150/155, FMPH350/355, FMPH450/455
B	1060627SP	100-120V FMPH250/255, FMPH350/355, FMPH450/455, FPPH250/255, FPPH350/355, FPPH450/455
C	1063308SP	100-120V FMPH450/455, FPPH350/355
D	1063433SP	208-240V FMPH250/255 CE/Non-CE Export, FPPH250/255 CE/Non-CE Export
E	1063432SP	250V FPPH250/255 CE/Non-CE Export
1	1061009	Cable Assembly, Transformer Box #1
2	1061010	Cable Assembly, Transformer Box #2
3	1061011	Cable Assembly, Transformer Box Line
4	1061016	Cable Assembly, Transformer Box Filter Pump
5	1063311	Cable Assembly, Transformer Box #1
6	1063312	Cable Assembly, Transformer Box #2
7	1063313	Cable Assembly, Transformer Box #3
8	1063314	Cable Assembly, Transformer Box Filter Pump
9	1063316	Cable Assembly, Transformer Box Line
10	2001415	Cover, Transformer Box
11	2002260	Plate, Strain Relief
12	2002318	Cover, Transformer Box Cable
13	8070012	Relay, 18 Amp 1/3-HP 24V Coil
14	8070070	Terminal, Ground Lug
15	8070155	Connector, 9-Pin Male
16	8070680	Transformer, 208-240V/24VAC 50/60Hz 20VA
17	8070800	Transformer, 120V/24VAC 50/60Hz 50VA
18	8071973	Terminal, Post
19	8071999	Transformer, 208-240V V/F Dual Voltage
20	8072176	Transformer, 100-120V V/F Dual Voltage
21	8090052	Nut, 10-24 Hex
22	8090071	Nut, 1/4-20 Hex
23	8090103	Screw, 8-32 X 1/2-inch Slotted Truss Head
24	8090123	Screw, 10-24 X 3/4-inch Slotted Truss Head
25	8090131	Screw, 1/4-20 X 3/4-inch Hex Head
26	8090237	Nut, 4-40 Keps Hex
26	8090247	Nut, 8-32 Keps Hex
28	8261376	Nut, 10-32 Keps Hex
29	8090354	Screw, 4-40 X 3/4-inch Slotted Round Head
30	8090360	Screw, #8 X 3/8-inch Hex Washer Head
31	8090656	Screw, 4-40 X 3/8-inch Slotted Round Head
32	8101164	Block, One-Piece Screwless Terminal
33	8160217	Insulation, Terminal Block Paper
34	8241242	Box, Transformer
35	8241243	Box, Transformer
*	WIR0439	Wire Assembly, Transformer Box *(used in Items B, D, and E)*
*	WIR0447	Wire Assembly, Transformer Box *(used in Item A)*
*	WIR0580	Wire Assembly, Transformer Box *(used in Item C)*

* Not illustrated.

2.6.3 High-Limit Thermostat and Temperature Probe

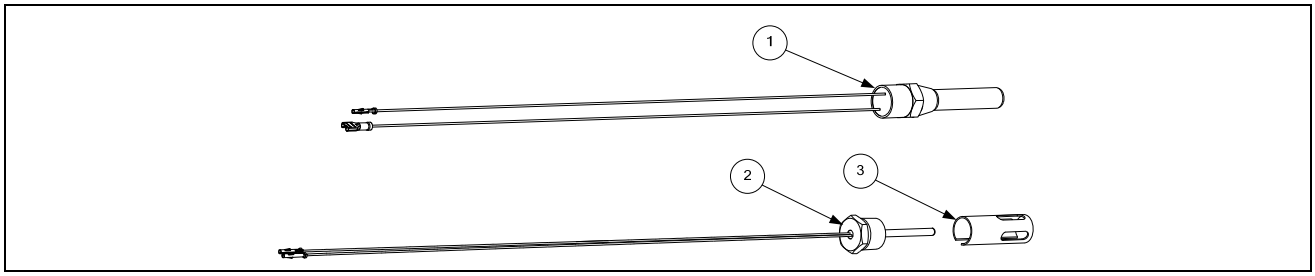

ITEM	PART #	COMPONENT
1	8261177	High Limit Thermostat - 425°F/218°C
2	8064206	Temperature Probe
3	2100681	Probe Guard

2.7 Frypots and Associated Components

2.7.1 Full-Vat Frypot Components

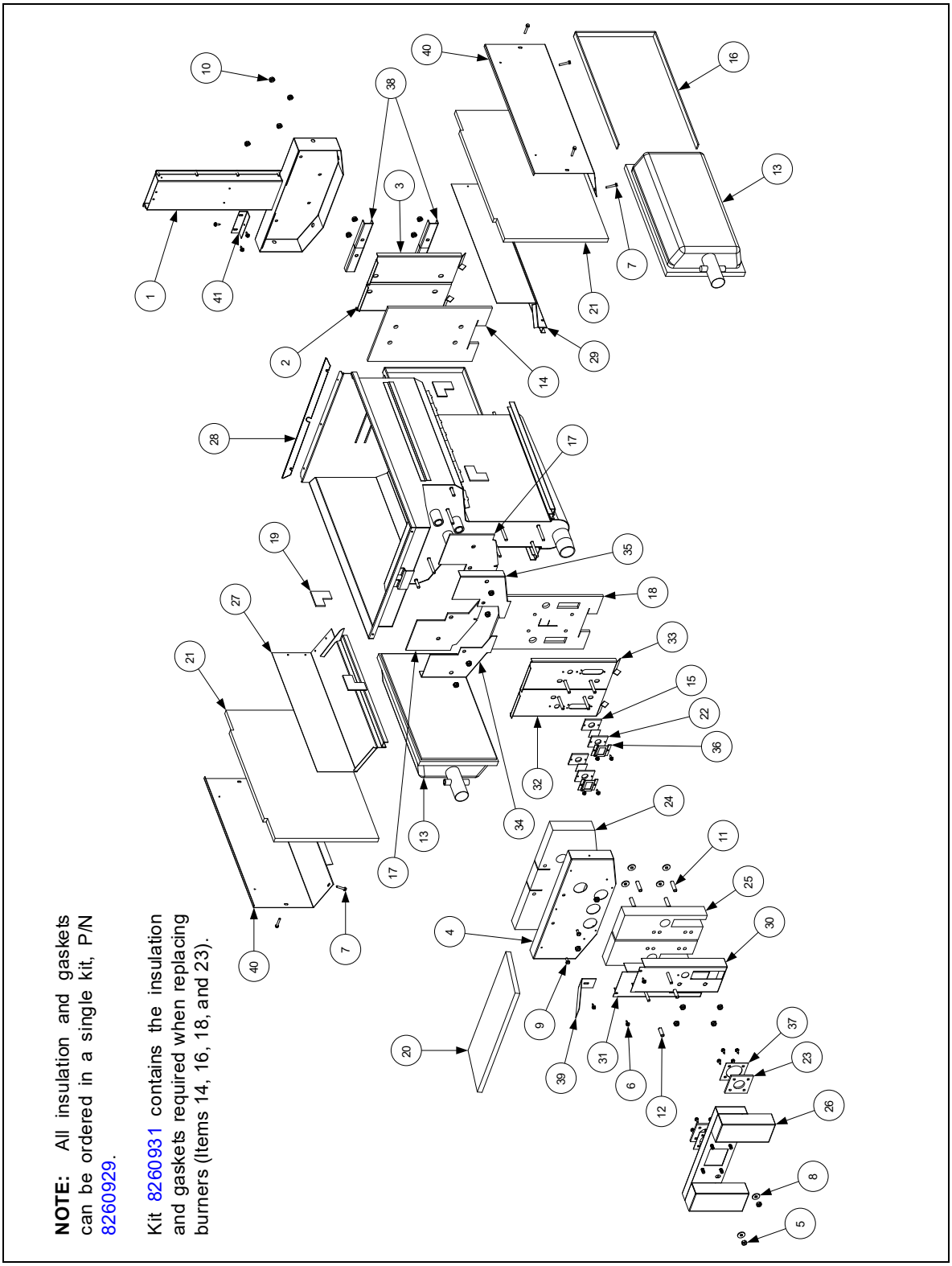

ITEM	PART #	COMPONENT
1	1061019SP	Flue Assembly, Full-vat
2	2000936	Back, Left Full-vat Combustion Chamber
3	2000937	Back, Right Full-vat Combustion Chamber
4	2002227	Retainer, Full-vat Upper Insulation
5	8090059	Nut, 1/4-20 Flange Hex
6	8090361	Screw, #8 X 1/2-inch Hex Head Drill Point
7	8090362	Screw, #8 X 1 1/4-inch Hex Washer Head Drill Point
8	8090435	Washer, Steel
9	8090500	Screw, #10 X 1/2-inch Hex Washer Head 410 SS
10	8090804	Nut, 1/4-20 Keps Hex
11	8100476	Spacer, .25-inch X 1.187-inch
12	8100500	Spacer, .25-inch X .9375-inch
13	8261072	Burner, Universal Replacement
14	8120355	Insulation, Full-vat Lower Rear
15	8120356	Insulation, Burner Sight Glass
16	8160577	Insulation, Burner
17	8120404	Insulation, Left or Right Front Seal
18	8120457	Insulation, Full-vat Lower Front
19	8120706	Insulation, Upper Burner Rail
20	8120993	Insulation, Upper Oil Zone
21	8121029	Insulation, Combustion Chamber Side
22	8140048SP	Glass, Burner Sight
23	8160057	Gasket, Plenum
24	8160560	Insulation, Full-vat Upper Front
25	8160561	Insulation, Left or Right Outer Front
26	8230969	Plenum, Full-vat
27	8231777	Side and Rail, Left Full-vat Combustion Chamber
28	9004253	Strip, Fluecap Retainer
29	8233142	Side and Rail, Right Full-vat Combustion Chamber
30	8233304	Front, Full-vat Right Combustion Chamber
31	8233305	Front, Full-vat Left Combustion Chamber
32	8233315	Retainer, Left Full-vat Lower Front Insulation
33	8233316	Retainer, Right Full-vat Lower Front Insulation
34	8240863	Retainer, Left Full-vat Upper Insulation
35	8240864	Retainer, Right Full-vat Upper Insulation
36	9001031	Retainer, Burner Sight Glass
37	9001049	Retainer, Plenum Gasket
38	9001221	Retainer, Rear Insulation
39	9001515	Brace, Upper Oil Zone Insulation
40	9004452	Retainer, Combustion Chamber Side Insulation
41	9300818	Bracket, Flue to Frypot
*	8260929	Insulation Kit, Complete Full-Vat
*	8260931	Insulation Kit, Burner Full-Vat
*	1061050SP	Frypot, Complete Assembly, Natural/Propane
*	1061053	Frypot, Complete Assembly, Manufactured Gas

* Not illustrated.

2.7.2 Dual-Vat Frypot Components

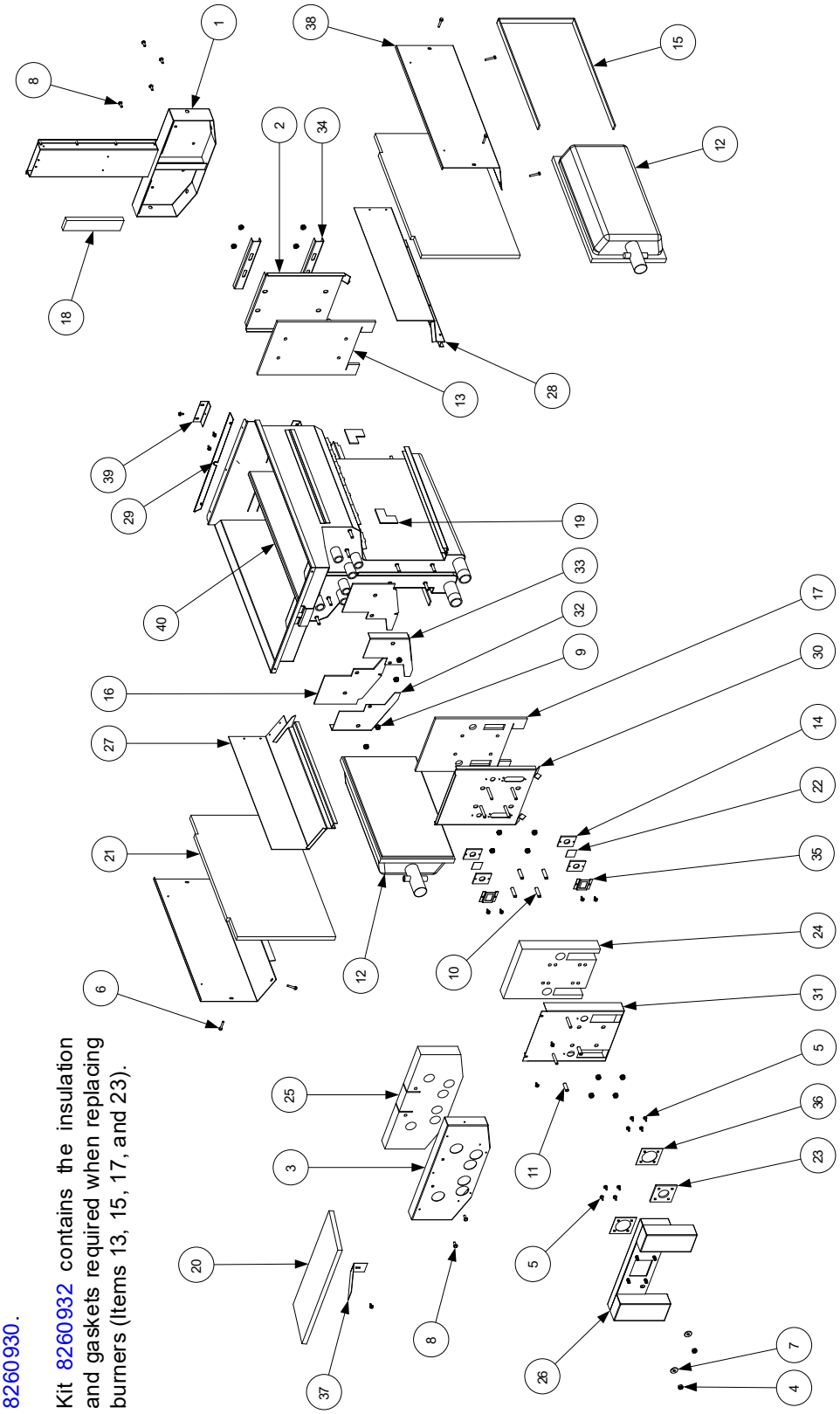

NOTE: All insulation and gaskets can be ordered in a single kit, P/N 8260930.

Kit 8260932 contains the insulation and gaskets required when replacing burners (Items 13, 15, 17, and 23).

ITEM	PART #	COMPONENT
1	1061018SP	Flue Assembly, Dual-vat
2	2000941	Back, Dual-vat Combustion Chamber
3	2002229	Retainer, Dual-vat Upper Insulation
4	8090059	Nut, 1/4-20 Flange Hex
5	8090360	Screw, #8 X 3/8-inch Hex Head
6	8090362	Screw, #8 X 1 1/4-inch Hex Washer Head Drill Point
7	8090435	Washer, Steel
8	8090500	Screw, #10 X 1/2-inch Hex Washer Head 410 SS
9	8090804	Nut, 1/4-20 Keps Hex
10	8100476	Spacer, .25-inch X 1.187-inch
11	8100500	Spacer, .25-inch X .9375-inch
12	8261072	Burner, Universal Replacement
13	8120354	Insulation, Dual-vat Lower Rear
14	8120356	Insulation, Burner Sight Glass
15	8160577	Insulation, Burner
16	8120404	Insulation, Left or Right Front Seal
17	812458	Insulation, Dual-vat Lower Front
18	8120688	Insulation, Flue Collector
19	8120706	Insulation, Upper Burner Rail
20	8120993	Insulation, Upper Oil Zone
21	8121029	Insulation, Combustion Chamber Side
22	8140048SP	Glass, Burner Sight
23	8160057	Gasket, Plenum
24	8160558	Insulation, Dual-vat Lower Front
25	8160559	Insulation, Dual-vat Upper Front
26	8230970	Plenum, Dual-vat
27	8232822	Side and Rail, Left Dual-vat Combustion Chamber
28	8232823	Side and Rail, Right Dual-vat Combustion Chamber
29	9004253	Strip, Fluecap Retainer
30	8233302	Front, Dual-vat Combustion Chamber
31	8233303	Retainer, Dual-vat Lower Front Insulation
32	8240865	Retainer, Left Dual-vat Upper Insulation
33	8240866	Retainer, Right Dual-vat Upper Insulation
34	9000914	Retainer, Lower Rear Insulation
35	9001031	Retainer, Burner Sight Glass
36	9001049	Retainer, Plenum Gasket
37	9001515	Brace, Upper Oil Zone Insulation
38	9004452	Retainer, Combustion Chamber Side Insulation
39	9300818	Bracket, Flue to Frypot
40	8240541	Riser, DV Pot Divider W/A
*	8260930	Insulation Kit, Complete Dual-Vat
*	8260932	Insulation Kit, Burner Dual-Vat
*	8233327	Frypot, Dual-vat
*	1061080SP	Frypot, Complete Assembly, Natural/Propane

* Not illustrated.

** For rear flush oil return components, see page 2-20.

2.8 Gas Supply and Combustion System Components

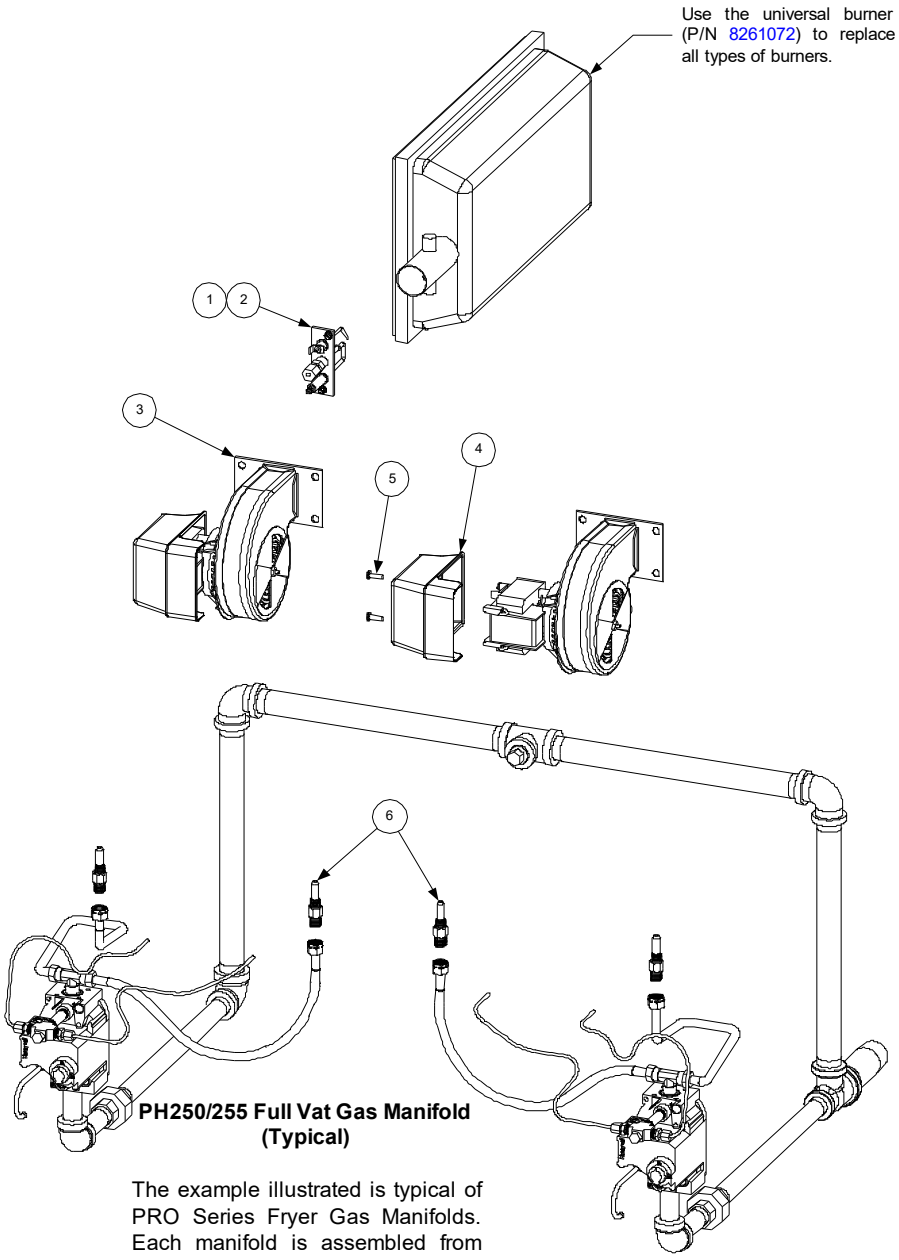

PH250/255 Full Vat Gas Manifold (Typical)

The example illustrated is typical of PRO Series Fryer Gas Manifolds. Each manifold is assembled from standard 1/2-, 3/4-, and 1-inch NPT black iron pipe nipples, elbows, tees, plugs, and unions, which may be locally aquired.

See Section 2.10 for details of gas valves and related components.

ITEM	PART #	COMPONENT
1		Ignitor *(includes gasket 8160059, which may be ordered separately)*
	8260981	Natural Gas (G20, G25)
	8260982	Propane (G30, G31)
	8261002	Manufactured Gas
2	8261371	Screw, #8 X 1/2-inch Hex Head (pkg. of 25)
3		Blower Assembly, Combustion Air *(includes harness and Items 4, and 5)*
	1062996SP	100V 50/60 Hz (Left)
	1062999SP	100V 50/60 Hz (Right)
	1062994SP	115V 50/60 Hz. (Left)
	1062997SP	115V 50/60 Hz (Right)
	1062995SP	208-240V 50/60 Hz (Left)
	1062998SP	208-240V 50/60 Hz (Right)
	1063000SP	230V 50/60 Hz CE (Left)
	1063001SP	230V 50/60 Hz CE (Right)
*	8263322	Gasket, Plenum Blower *(Used between blower and plenum)*
4	8160554	Cover, Blower Motor *(component of all blowers listed above)*
5	8090938	Screw, 10-32 X 5/8-inch Philips Truss Head *(secures Item 4 to Item 3)*
*	8068806SP	Harness Assembly, Blower Motor *(component of all blowers listed above)*
6		Orifice, Burner
	8121137	1.95 mm Propane/Butane (G30, G31) (0-4999 Ft, 0-1524 M) (CE)
	8101221	2.00 mm Propane/Butane (0-4999 Ft, 0-1524 M*) (Japan only)*
	8100386	2.10 mm Propane/Butane (0-4999 Ft, 0-1524 M)
	8100413	2.16 mm Propane/Butane (G30, G31) (5000-6999 Ft, 1525-2133 M)
	8121028	2.20 mm Propane/Butane (G30, G31) (7000-10,999 Ft, 2134-3352 M)
	8121134	3.10 mm Natural Gas (G20, G25) (0-4999 Ft, 0-1524 M) *(Japan only)*
	8100403	3.40 mm Natural Gas (G20, G25) (0-4999 Ft, 0-1524 M)
	8100437	3.60 mm Natural Gas (G20, G25) (5000-6999 Ft, 1525-2133 M)
	8121144	3.65 mm Natural Gas (G20, G25) (7000-8999 Ft, 2134-2743 M)
	8121145	3.70 mm Natural Gas (G20, G25) (9000-10,999 Ft, 2744-3352 M)
	8100642	5.95 mm Manufactured Gas (0-4999 Ft, 0-1524 M)
		CE Conversion Kits
*	8261196	Natural Gas (G20, G25) to Propane/Butane (G30, G31), Full-vat/Dual-vat
*	8261197	Propane/Butane (G30, G31) to Natural Gas (G20, G25), Full-vat/Dual-vat
		Non-CE Conversion Kits
*	8261145	Natural Gas (G20, G25) to Propane/Butane (G30, G31), Full-vat ***prior to 03/2020***
*	8263616	Natural Gas (G20, G25) to Propane/Butane (G30, G31), Full-vat ***03/2020 to current***
*	8261146	Propane/Butane (G30, G31) to Natural Gas (G20, G25), Full-vat
*	8261147	Natural Gas (G20, G25) to Propane/Butane (G30, G31), Dual-vat ***prior to 03/2020***
*	8263615	Natural Gas (G20, G25) to Propane/Butane (G30, G31), Dual-vat ***3/2020 to current***
*	8261148	Propane/Butane (G30, G31) to Natural Gas (G20, G25), Dual-vat
*	8072263	Switch, Air Pressure ***(use 8072262 in units with 100VAC power supply)***

* Not illustrated.

2.9 Gas Valves and Associated Components

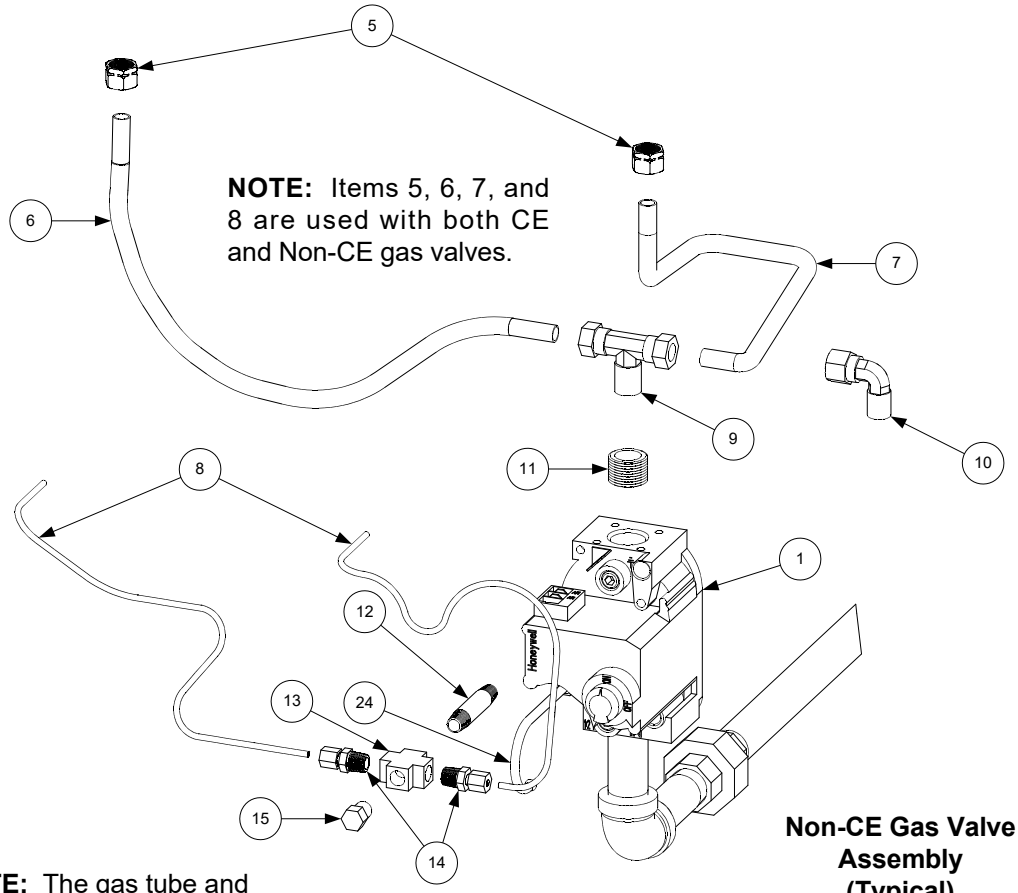

NOTE: Items 5, 6, 7, and 8 are used with both CE and Non-CE gas valves.

Non-CE Gas Valve Assembly (Typical)

NOTE: The gas tube and enrichment tube fittings are assembled in varying configurations depending upon the location of the valve and whether the associated frypot is a full- or dual-vat pot.

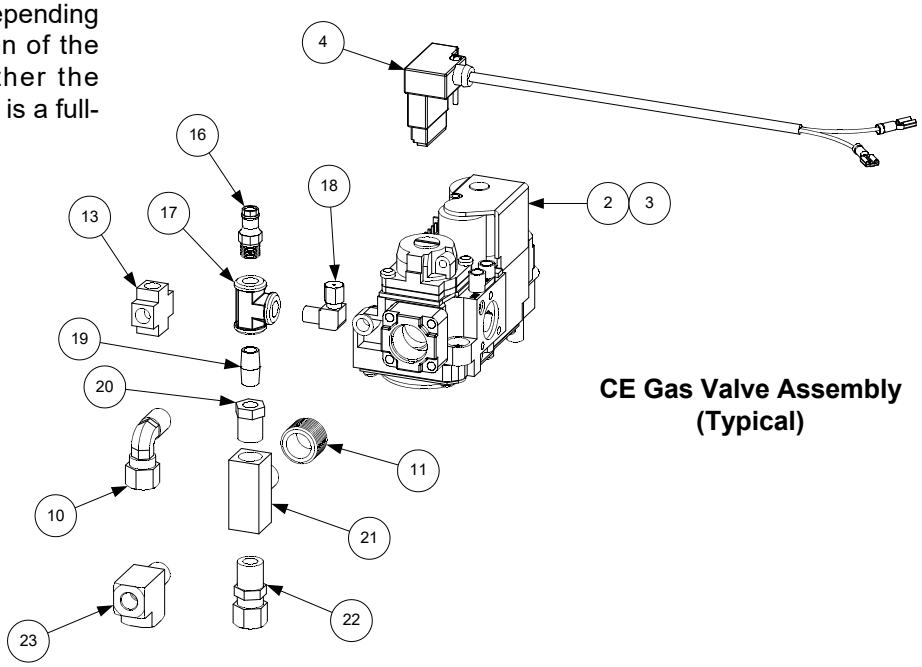

CE Gas Valve Assembly (Typical)

ITEM	PART #	COMPONENT
1		Valve, Non-CE Gas
	826-1122	Natural Gas (G20, G25)
	826-1123	Propane Gas (G30, G31)
2	810-1715	Valve, CE Gas (G20, G25, G30, G31)
3	810-1041	Accessory Kit *(contains parts to adapt Item 2 to specific fryer configuration)*
4	806-9678SP	Plug Assembly, CE Gas Valve
5	810-0494	Ferrule (Nut), Orifice
6	810-1355	Gas Line, 3/8-inch OD X 15-inch SS Flexible
7	810-1354	Gas Line, 3/8-inch OD X 12-inch SS Flexible
*	810-1353	Gas Line, 3/8-inch OD X 9-inch SS Flexible
8	811-0800	Tube, 1/8-inch OD X 12.5-inch Enrichment *(cut and form to fit)*
9	813-0301	Tee, 1/4-inch Male NPT to 3/8-inch Tube
10	813-0302	Elbow, 1/4-inch Male NPT to 3/8-inch Tube 90°
11	813-0304	Bushing, 1/2-inch NPT to 1/4-inch NPT Flush Reducing
12	813-0405	Nipple, 1/8-inch NPT X 2-inch
13	813-0378	Fitting, 1/8-inch NPT Cross
14	813-0340	Adapter, 1/8-inch NPT to 1/8-inch Tube
15	813-0154	Plug, 1/8-inch NPT Hex Head Pipe
16	810-1176	Tap, 1/8-inch NPT Pressure
17	813-0377	Tee, 1/8-inch NPT Female
18	813-0354	Elbow, 1/8-inch NPT X 1/8-inch Tube Compression
19	813-0016	Nipple, 1/8-inch NPT X Close
20	810-1006	Bushing, 1/4-inch NPT to 1/8-inch NPT Reducing
21	813-0495	Tee, 1/4-inch Male NPT to Female NPT
22	810-1025	Connector, 1/4-inch Male NPT to 3/8-inch Tube
23	810-1026	Tee, 1/4-inch Male NPT to Female NPT Street
24	810-0691	Tube, 1/8-inch Vent

* Not illustrated.

2.9.1 Gas Valve Wiring

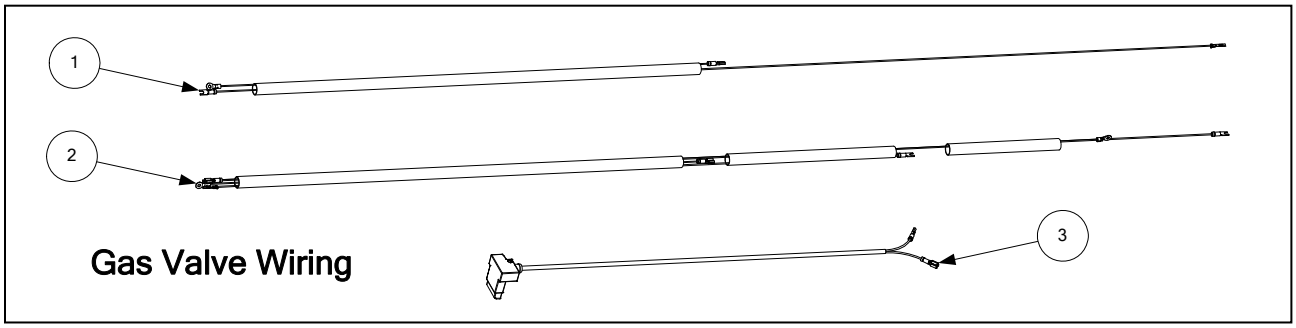

Gas Valve Wiring

ITEM	PART #	COMPONENT
1	806-3941	Harness, Full Vat Gas Valve
2	806-3940	Harness, Dual Vat Gas Valve
3	806-9678SP	Plug Assembly, CE Gas Valve

2.10 Wiring Assemblies and Harnesses

Filter Associated Wiring

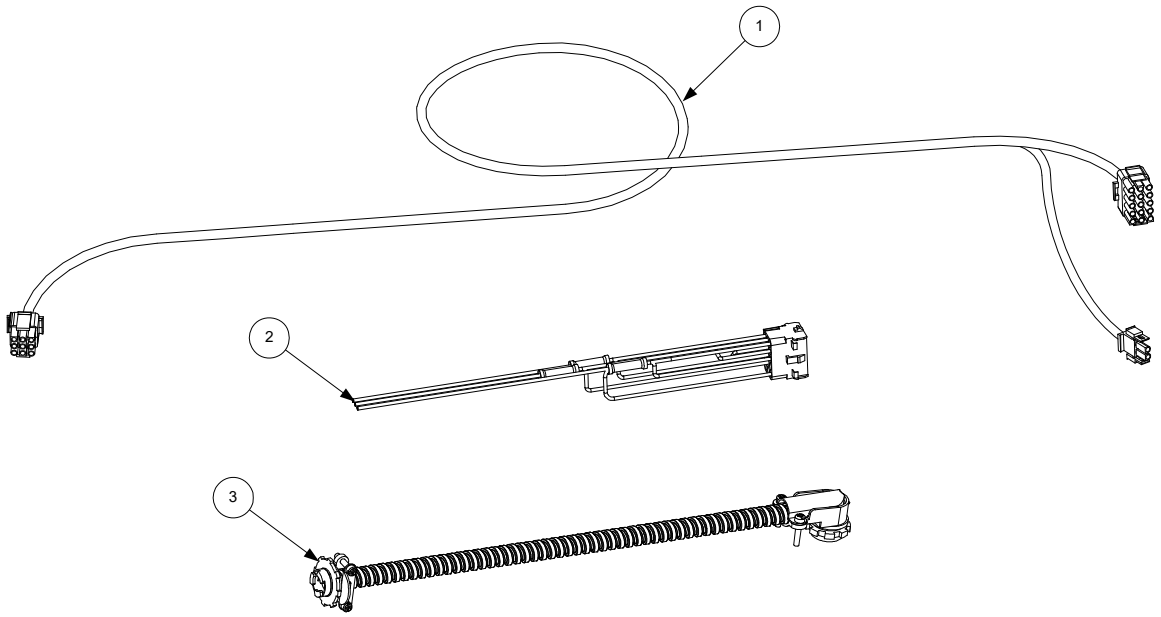

ITEM	PART #	COMPONENT
1	810-1062	Cable, Filter Box Lower 9-Pin Plug to 807-2000/2001 C2 Connector
*	807-2000	Cable, 810-1062 C2 Connector to Component Box *(units w/Basket Lift)*
2	807-2001	Cable, 810-1062 C2 Connector to Component Box *(units w/o Basket Lift)*
*	812-0362	Spaghetti Insulation, 36”
3	106-1020SP	Pump Motor to Transformer Box Wiring Assembly

* Not illustrated.

Main Wiring Harnesses

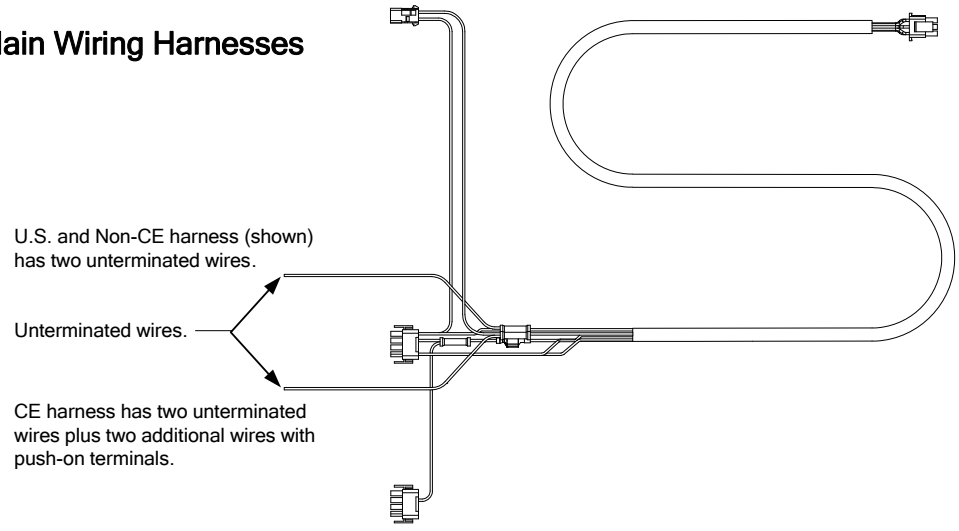

ITEM	PART #	COMPONENT
	807-1978	U.S. and Non-CE Export Main Wiring Harness
	807-2168	CE Main Wiring Harness
	807-4014	U.S. and Non-CE Export Main Wiring Harness *(Used on 3- or 5-Station Fryers)*

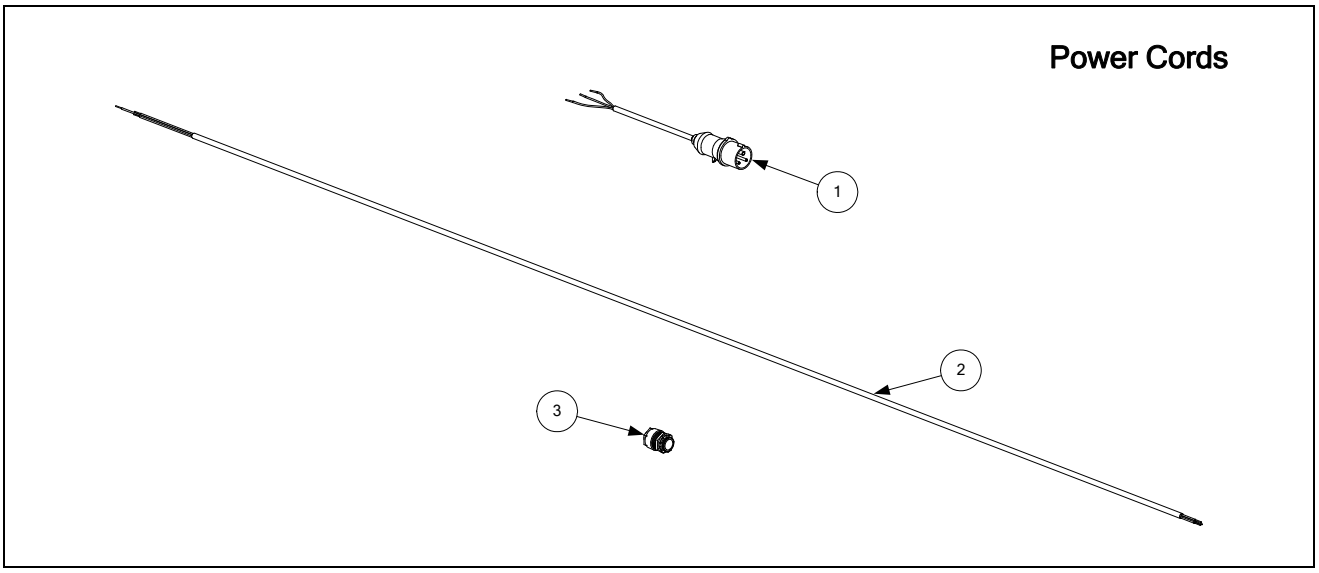

ITEM	PART #	COMPONENT
1	807-1696	Power Cord, CE
2	807-1685	Power Cable, 110-inch, 3-wire, 16-gauge, 450V, 18A
3	807-1560	Strain Relief
*	806-5332SP	Power Cord, 120V w/Grounding Plug *(w/Push-On Terminals and Clamp)*
*	807-0154	Power Cord, 120V w/Grounding Plug *(w/o Terminals or Clamp)*

2.11 Miscellaneous Connectors and Terminals

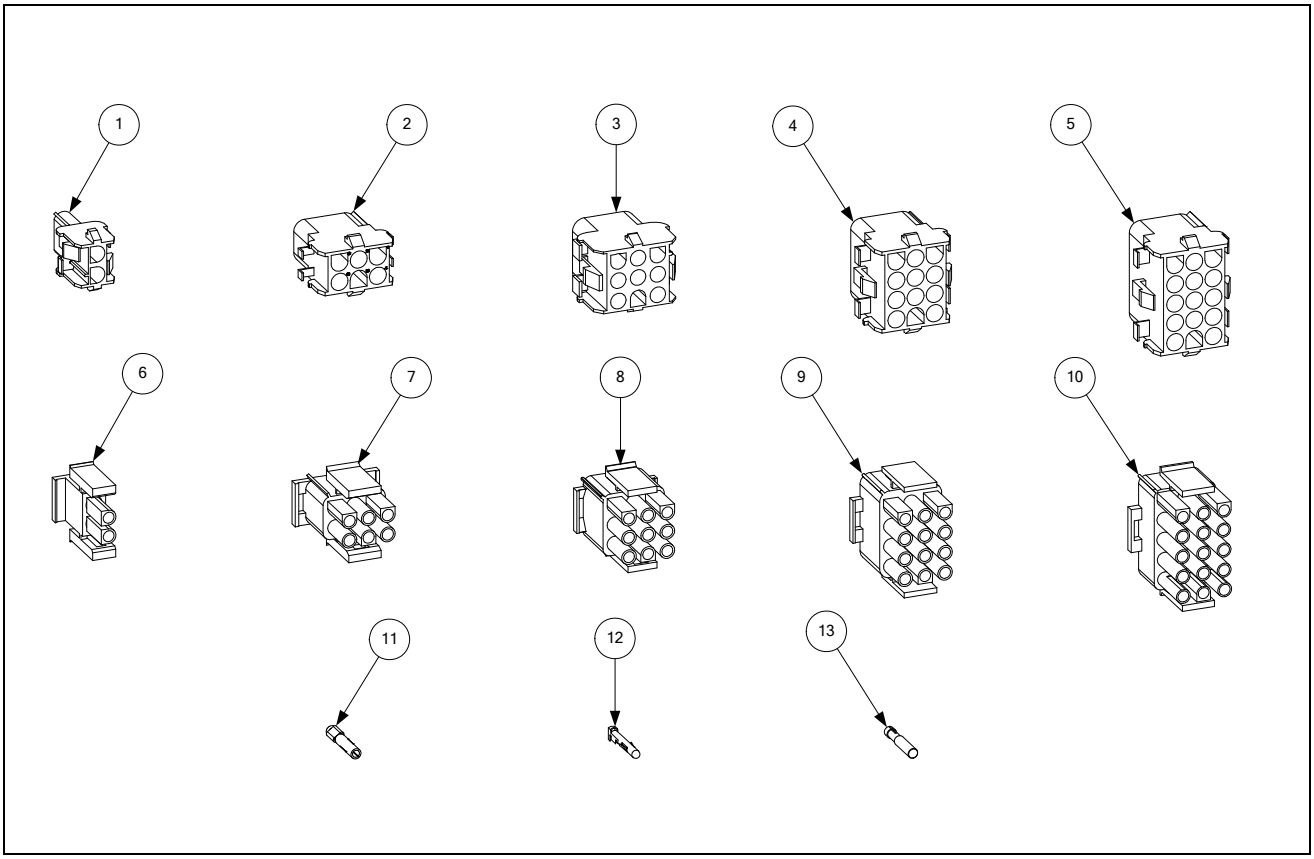

ITEM	PART #	COMPONENT
1	807-1068	2-Pin Female
2	807-0158	6-Pin Female
3	807-0156	9-Pin Female
4	807-0159	12-Pin Female
5	807-0875	15-Pin Female
6	807-1067	2-Pin Male
7	807-0157	6-Pin Male
8	807-0155	9-Pin Male
9	807-0160	12-Pin Male
10	807-0804	15-Pin Male
11	826-1341	Terminal, Female Split Pin (pkg. of 25)
12	826-1342	Terminal, Male Split Pin (pkg. of 25)
13	807-2518	Plug, Mate-N-Lock (Dummy Pin)

* Not illustrated.

PRO H50/55-SERIES GAS FRYERS
CHAPTER 3: SINGLE H50/55 UNIT UNIQUE PARTS LIST

3.1 Single H50/55 Filtration System Components

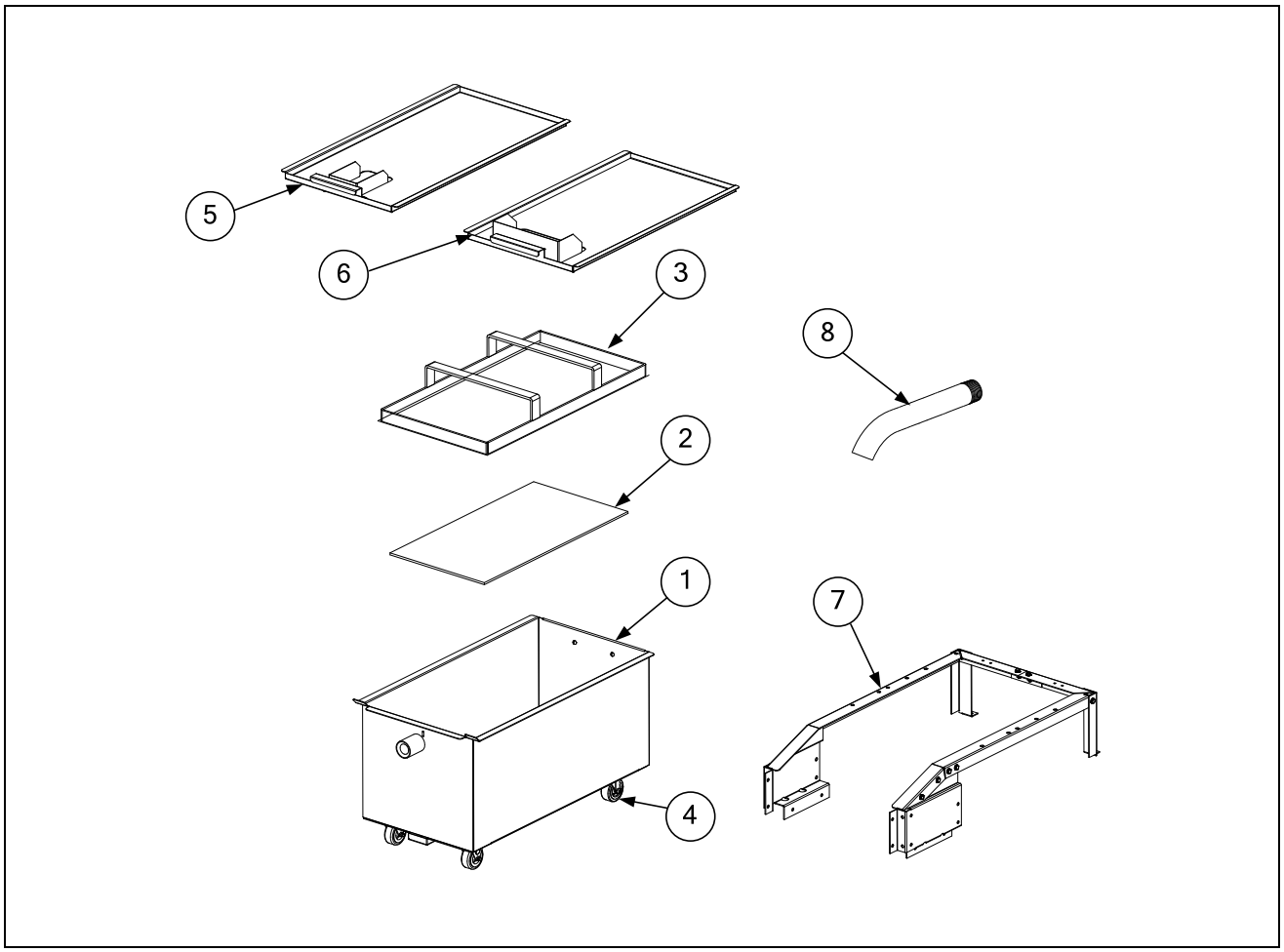

ITEM	PART #	COMPONENT
	8069255SP	Filter Pan Assembly, FootPrint Pro Filter *(includes Items 1, 2, 3, and 4)*
1	8232751	Pan Assembly, Filter
2	8103537	Screen, Sana Grid
3	8101406	Ring, Filter Paper Hold-Down Ring
4	8102805	Caster, 2" for Filter Pan
	8160596	O-Ring *(two required)*
5	8069446	Cover, Filter Pan, Full-vat
6	8232284	Cover, Filter Pan, Dual-vat
7	8065317	Rail Assembly, Single
8		Drain Valve Extension
	8121226SP	Full-Vat (1.25-inch)
	8121227	Dual-Vat (1-inch)

3.2 Single H50/55 Oil Return Components

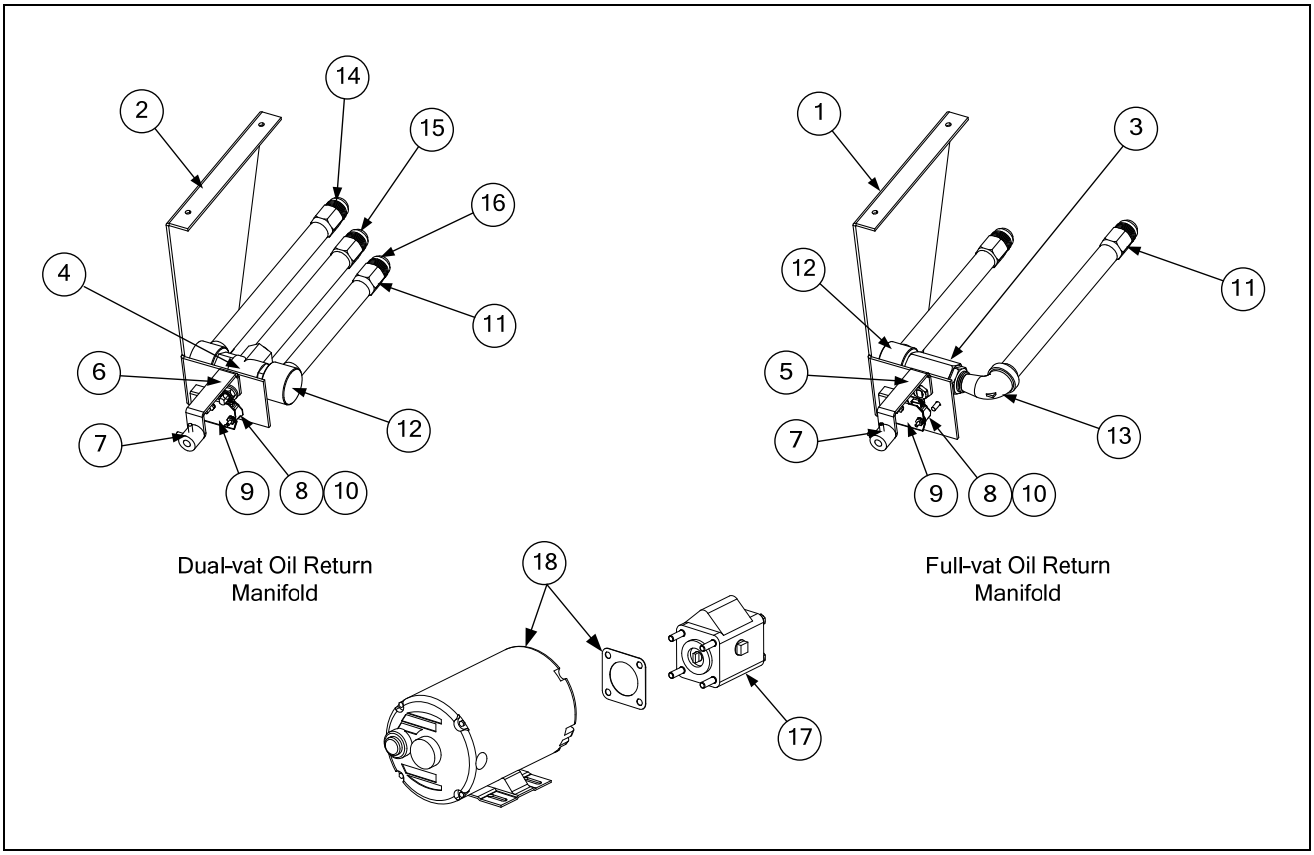

ITEM	PART #	COMPONENT
1	1081030	Mounting Bracket, Full-vat, Oil Return Valve
2	2204255	Mounting Bracket, Dual-vat, Oil Return Valve
*	2206187	Bracket, Valve *(used to attach Item 3 to Item 1)*
3	8102201	Valve, ½" Ball
4	8101003	Valve, 180° 3-way Ball
5	8237366	Handle, Full-vat, Oil Return
6	8237215	Handle, Dual-vat, Oil Return
7	8090157	Set Screw, 1/16 Socket, Oil Return Handle
8	8072104	Microswitch, Micro-roller and Lever
9	9022348	Cover, Safety Switch
10	8160220	Insulation, Switch
11	8101669	Adapter, Female, 7/8" OD x ½"
12	8130908	Adapter, ½" NPT, 90°
13	8130165	Elbow, Street, ½" x ½ NPT, 90° Black Metal
14	8130496	Nipple, ½" x 9.50 NPT, Black Metal
15	8130362	Nipple, ½" x 7.50 NPT, Black Metal
16	8130099	Nipple, ½" x 7.00 NPT, Black Metal
17	8263191	Filter Pump and Gasket Kit, 4 GPM, 2-piece *(for gasket only, order P/N 8160093)*
18		Motor and Gasket Kit, 50/60 Hz *(for gasket only, order P/N 8160093)*
	8261785	100V
	8261712	115V
	8261756	208V
	8261270	220-240V
	8261755	250V

* Not illustrated.

3.3 Single H50/55 Component Boxes

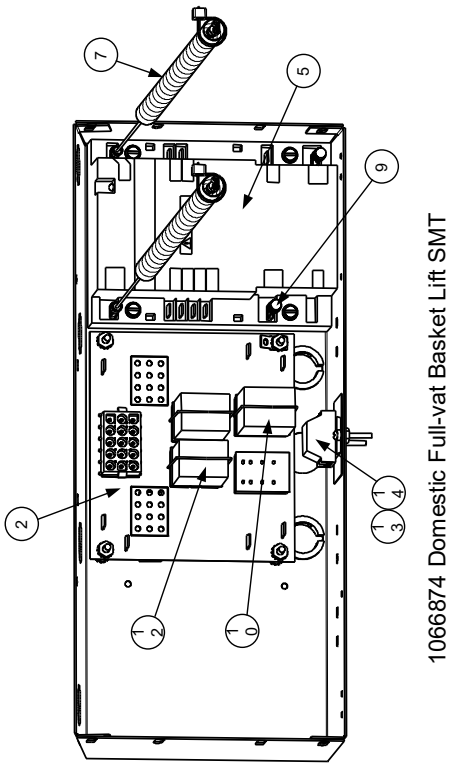

1066874 Domestic Full-vat Basket Lift SMT

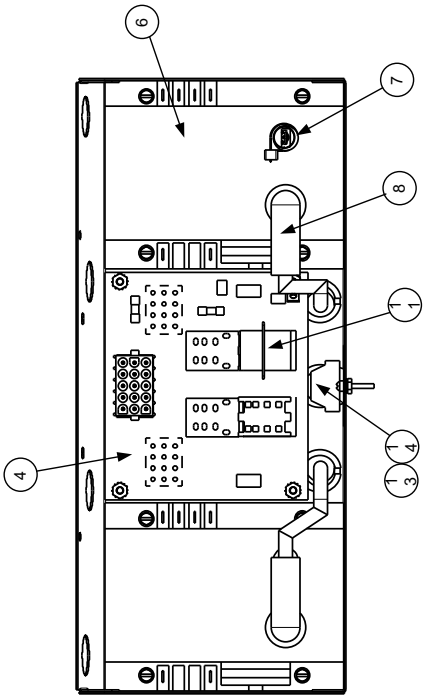

1066201 CE Dual-vat non-Basket Lift FAST

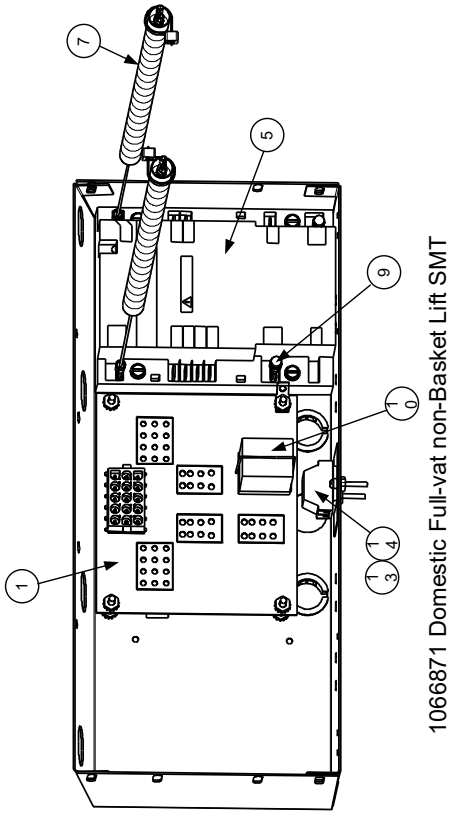

1066871 Domestic Full-vat non-Basket Lift SMT

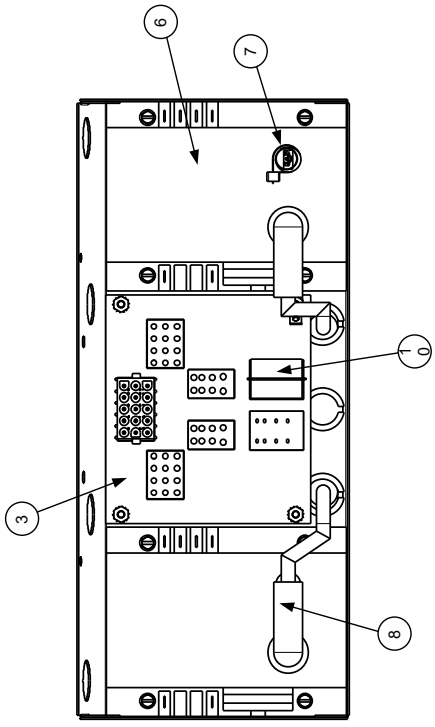

1066863 CE Full-vat Single non-Basket Lift SMT

ITEM	PART #	COMPONENT
1	1066708	Interface Board, SMT, Gas, non-Basket Lift, FV *(U.S., Canada, Mexico)*
2	8262264	Interface Board, SMT, Gas, with Basket Lift, FV *(U.S., Canada, Mexico)*
3	1066707	Interface Board, SMT, Gas, non-Basket Lift, FV *(Export)*
*	8080014	Interface Board, **GIVEG** Australia/NZ ***04/2021 and after (use harness 807-6370)***
4	1066711	Interface Board, SMT, Gas, non-Basket Lift, DV *(FAST)*
5	8073366	Ignition Module, Dual-spark, Full-vat *(U.S., Canada, HK, Mexico)*
*	8073365	Ignition Module, Single-spark, Dual-vat *(U.S., Canada, H.K., Mexico)*
*	8075949	Ignition Module, Single Spark Fenwal
6	8071006	Ignition Module, CE/non-CE Export ***(except** Australia, Canada, H.K., Mexico)*
*	8072971	Ignition Module *(Australia)* ***prior to 04/2021***
*	8076382	Ignition Module, Australia/NZ 3 sec. FV Left, DV Fenwal ***04/2021 to current***
*	8076383	Ignition Module, Australia/NZ 4 sec. FV Right Fenwal ***04/2021 to current***
*	8075986	Harness, Fenwal Module FV
*	8075987	Harness, Fenwal Module DV
7	8066085	Wire, Ignitor
*	1088328	Wire Assy, Flame Sense ***(used with 8076382 and 8076383)***
*	8073483	Cable, Ignition
8	8071878	Cable, 19" Ignition *(used with 8071006)*
9	8073484	Connector, Rajah
10	8070833	Relay, Latch/Valve
11	8073969	Relay, 5A (24VDC)
12	8070834	Relay, Basket Lift, 15A, 12V
13	8101164	Block, 1 Piece Screwless Terminal
14	8160217	Paper, CE Single Terminal, Black, Insulating

* Not illustrated.

NOTE 1: U.S., Canadian, Hong Kong, and Mexican units use two different modules depending upon the configuration of the frypot. Dual-vat units use two 8073365 Single-Spark Ignition Modules. Full-vat units use one 8073366 Dual-Spark Ignition Module. Also, in full-vat units, only one latch relay (Item 10) is used, located in the lower right socket.

NOTE 2: Basket Lift Relays (Item 12) are present only on units equipped with basket lifts.

3.4 Single H50/55 High-Limit Thermostat and Temperature Probe

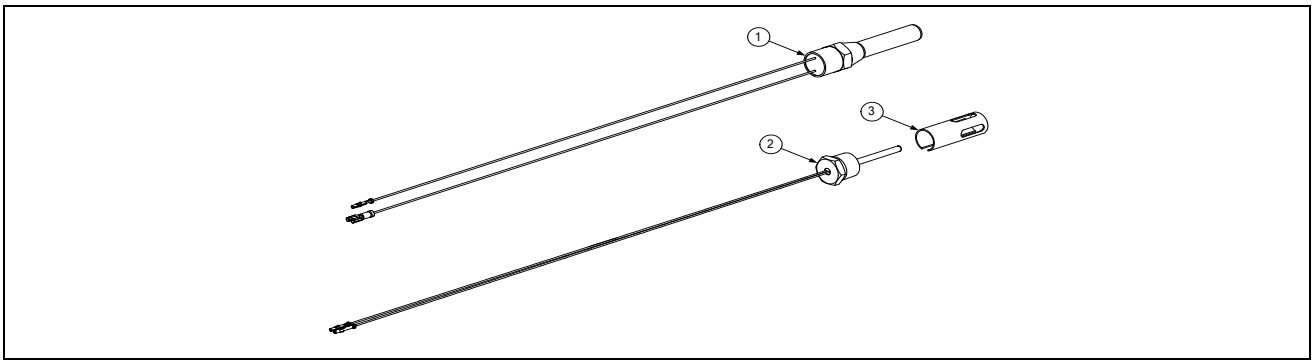

ITEM	PART #	COMPONENT
1	8261177	High Limit Thermostat - 425°F/218°C
2	8064206	Temperature Probe
*	1068457SP	Temperature Probe, FAST
*	8065046	Cable, FAST Probe
3	2100681	Probe Guard

* Not illustrated.

3.5 Single H50/55 Transformer Boxes

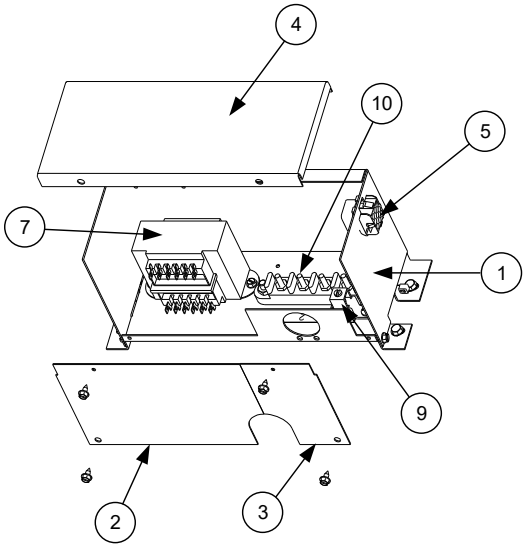

8066227 H150 100/120V Domestic

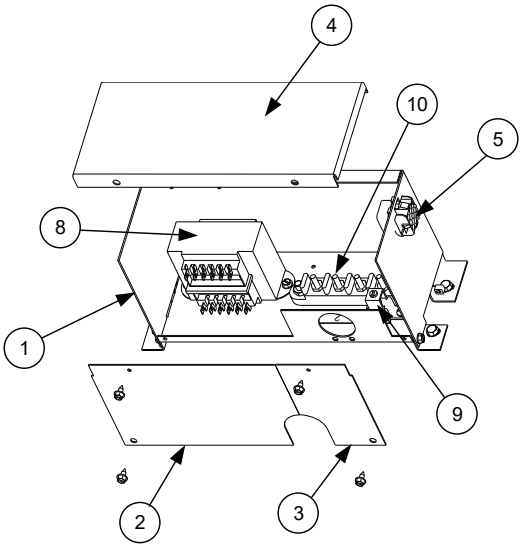

8066228 H150 220/230/240V Domestic

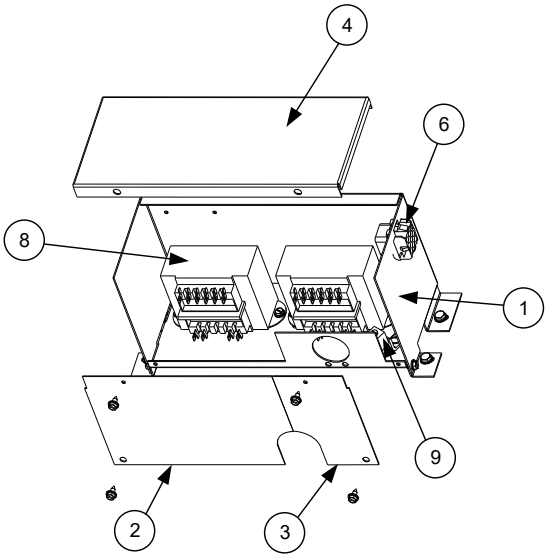

1066058 H150 208-250V FAST

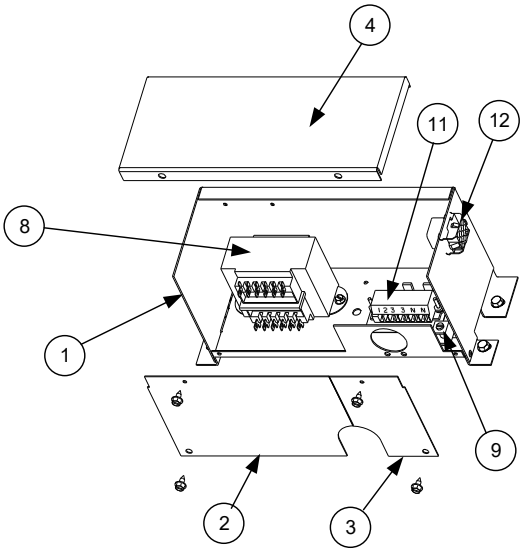

8066643 H150 CE

ITEM	PART #	COMPONENT
1	9002697	Transformer Box
2	9002703	Cover, Front, Large
3	9002709	Cover, Front, Small
4	9002708	Cover, Transformer Box
5	8066164	Harness Assembly, Domestic
6	1066056	Harness Assembly, FAST
7	8066637	Harness Assembly, CE
8	8072176	Transformer, V/F Dual Voltage 100/120V
9	8071999	Transformer, V/F Dual Voltage 208/222/230/240V
10	8070070	Terminal, Ground Lug
11	8071973	Terminal, Post
12	8101163	Terminal Block, Screwless

THIS PAGE INTENTIONALLY LEFT BLANK

FRYMASTER
8700 LINE AVENUE, SHREVEPORT, LA 71106-6800

800-551-8633
318-865-1711
WWW.FRYMASTER.COM
EMAIL: FRYSERVICE@WELBILT.COM

Welbilt offers fully-integrated kitchen systems. Welbilt's portfolio of award-winning brands includes Cleveland™, Convotherm®, Crystal Tips®, Dean®, Delfield®, Fabristeel®, Frymaster®, Garland®, Inducs®, Koldtech®, Kolpak®, Lincoln®, McCann's™, Merco®, Merrychef®, Multiplex®, RDI®, SerVend™, SunFire®, U.S. Range™, and WMaxx™. Supported by service brands: FitKitchen®, kitchen systems; and KitchenConnect®, cloud-based open platform.

Bringing innovation to the table · **welbilt.com**

©2024 Frymaster LLC. except where explicitly stated otherwise. All rights reserved. Continuing product improvement may necessitate change of specifications without notice.

Part Number FRY_SP_8196083 01/2024