Frymaster®

Your Growth Is Our Goal

Pro H55-Series

Gas Fryer

Service and Parts Manual

This manual is updated as new information and models are released. Visit our website for the latest manual.



8196083

Part Number: FRY_SP_8196083 01/2024

Original Instructions

WELBILT®

NOTICE

IF, DURING THE WARRANTY PERIOD, THE CUSTOMER USES A PART FOR THIS FRYMASTER DEAN EQUIPMENT OTHER THAN AN UNMODIFIED NEW OR RECYCLED PART PURCHASED DIRECTLY FROM FRYMASTER DEAN, OR ANY OF ITS AUTHORIZED SERVICERS, AND/OR THE PART BEING USED IS MODIFIED FROM ITS ORIGINAL CONFIGURATION, THIS WARRANTY WILL BE VOID. FURTHER, FRYMASTER DEAN AND ITS AFFILIATES WILL NOT BE LIABLE FOR ANY CLAIMS, DAMAGES OR EXPENSES INCURRED BY THE CUSTOMER WHICH ARISE DIRECTLY OR INDIRECTLY, IN WHOLE OR IN PART, DUE TO THE INSTALLATION OF ANY MODIFIED PART AND/OR PART RECEIVED FROM AN UNAUTHORIZED SERVICE CENTER.

NOTICE

This appliance is intended for professional use only and is to be operated by qualified personnel only. A Frymaster Factory Authorized Servicer (FAS) or other qualified professional should perform installation, maintenance, and repairs. Installation, maintenance, or repairs by unqualified personnel may void the manufacturer's warranty.

NOTICE

This equipment must be installed in accordance with the appropriate national and local codes of the country and/or region in which the appliance is installed.

NOTICE TO U.S. CUSTOMERS

This equipment is to be installed in compliance with the basic plumbing code of the Building Officials and Code Administrators International, Inc. (BOCA) and the Food Service Sanitation Manual of the U.S. Food and Drug Administration.

⚠ DANGER

Instructions to be followed in the event the operator smells gas or otherwise detects a gas leak must be posted in a prominent location. This information can be obtained from the local gas company or gas supplier.

⚠ WARNING

Improper installation, adjustment, alteration, service or maintenance can cause property damage, injury, or death. Read the installation, operating, and maintenance instructions thoroughly before installing or servicing this equipment. Only qualified service personnel may convert this appliance to use a gas other than that for which it was originally configured.

⚠ FOR YOUR SAFETY

Do not store or use gasoline or other flammable liquids or vapors in the vicinity of this or any other appliance.

⚠ DANGER

The front ledge of the fryer is not a step! Do not stand on the fryer. Serious injury can result from slips or contact with the hot oil.

⚠DANGER

No structural material on the fryer should be altered or removed to accommodate placement of the fryer under a hood. Questions? Call the Frymaster Dean Service Hotline at 1-800-551-8633.

NOTICE

Drawings and photos used in this manual are intended to illustrate operational, cleaning and technical procedures and may not conform to onsite management operational procedures.

NOTICE TO OWNERS OF UNITS EQUIPPED WITH COMPUTERS

U.S.

This device complies with Part 15 of the FCC rules. Operation is subject to the following two conditions: 1) This device may not cause harmful interference, and 2) This device must accept any interference received, including interference that may cause undesired operation. While this device is a verified Class A device, it has been shown to meet the Class B limits.

CANADA

This digital apparatus does not exceed the Class A or B limits for radio noise emissions as set out by the ICES-003 standard of the Canadian Department of Communications.

Cet appareil numerique n'emet pas de bruits radioelectriques depassany les limites de classe A et B prescrites dans la norme NMB-003 edictee par le Ministre des Communcations du Canada.

⚠ DANGER

Do not spray aerosols in the vicinity of this appliance while it is in operation.

⚠ DANGER

The crumb tray in fryers equipped with a filter system must be emptied into a fireproof container at the end of frying operations each day. Some food particles can spontaneously combust if left soaking in certain shortening material.

⚠ WARNING

Do not bang fry baskets or other utensils on the fryer's joiner strip. The strip is present to seal the joint between the fry vessels. Banging fry baskets on the strip to dislodge shortening will distort the strip, adversely affecting its fit. It is designed for a tight fit and should only be removed for cleaning.

NOTICE

The Commonwealth of Massachusetts requires any and all gas products to be installed by a licensed plumber or pipe fitter.

⚠ WARNING

This appliance is not intended for use by children under the age of 16 or persons with reduced physical, sensory or mental capabilities, or lack of experience and knowledge, unless they have been given supervision concerning use of the appliance by a person responsible for their safety. Do not allow children to play with this appliance.

⚠ WARNING

After installation of a gas fryer and after any maintenance to the gas system of a gas fryer-manifold, valve, burners, etc. – check for gas leaks at all connections. Apply a thick soapy solution to all connections and ensure there are no bubbles. There should be no smell of gas.

⚠ DANGER

When installed, this appliance must be electrically grounded in accordance with local codes, or in the absence of local codes, with the National Electrical Code, ANSI/NFPA 70, the Canadian Electrical Code, CSA C22.2 as applicable.

⚠ DANGER

When installed, this appliance must conform with local codes, or in the absence of local codes, with the National Fuel Gas Code, ANSI Z223.1/NFPA54, or the Natural Gas and Propane Installation Code, CSA B149.1 as applicable or the appropriate national code of the country in which installed.

NOTICE

The appliance must be installed and used in such a way that any water cannot contact the fat or oil.

⚠ WARNING

If the electrical power supply cord is damaged, it must be replaced by a Frymaster Factory Authorized Servicer or a similarly qualified person in order to avoid a hazard.

⚠ DANGER

Adequate means must be provided to limit the movement of the appliance without depending upon the gas line connector and the quick-disconnect device or its associated piping to limit the appliance movement.

All fryers equipped with casters must be stabilized by installing restraining chains. If a flexible gas line is used, an additional restraining cable must be connected at all times when the fryer is in use.

All fryers equipped with casters must be installed using a connector that complies with the Standard for Connectors for Moveable Gas Appliances, ANSI Z21.69 or CSA 6.16, and a quick-disconnect device that complies with the Standard for Quick-Disconnect Devices for Use with Gas Fuel, ANSI Z21.41 or CSA 6.9.

NOTICE

This appliance is intended to be used for commercial applications, for example in kitchens of restaurants, canteens, hospitals and in commercial enterprises such as bakeries, butcheries, etc., but not for continuous mass production of food.

⚠ DANGER

This appliance must be connected to a power supply having the same voltage and phase as specified on the rating plate located on the inside of the appliance door.

⚠ WARNING

Use caution and wear appropriate safety equipment to avoid contact with hot oil or surfaces that may cause severe burns or injury.

⚠ WARNING

Do not block the area around the base or under the fryers.

⚠ WARNING

Operation, installation, and servicing of this product may expose you to chemicals/products including [Bisphenol A (BPA), glass wool or ceramic fibers, and crystalline silica], which is [are] known to the State of California to cause cancer, birth defects or other reproductive harm. For more information go to www.P65Warnings.ca.gov.

PRO H50/55-SERIES GAS FRYERS
TABLE OF CONTENTS

CHAPTER 1: Service Procedures

1.1 Functional Description 1-1
1.1.1 The Electronic Ignition System 1-1
1.1.2 Interface Board 1-2
1.1.3 Thermostats 1-4
1.2 Accessing Fryers for Servicing 1-4
1.3 Cleaning the Gas Valve Vent Tube 1-5
1.4 Checking the Burner Manifold Gas Pressure 1-5
1.5 Measuring Flame Current 1-7
1.6 Replacing Fryer Components 1-7
1.6.1 Replacing the Controller or the Controller Wiring Harness 1-7
1.6.2 Replacing the Temperature Probe or High-Limit Thermostat 1-8
1.6.3 Replacing the Interface Board 1-9
1.6.4 Replacing an Ignition Module 1-9
1.6.5 Replacing an Ignitor Assembly 1-10
1.6.6 Replacing or Cleaning a Combustion Air Blower 1-10
1.6.7 Replacing a Gas Valve 1-13
1.6.8 Replacing a Burner Assembly 1-14
1.6.9 Replacing the Filter Motor, Filter Pump, or Filter Pump Solenoid Valve 1-15
1.6.10 Replacing the Frypot 1-16
1.6.11 Replacing Frypot Insulation and/or Upper Burner Rails 1-18
1.7 Troubleshooting and Problem Isolation 1-23
1.7.1 Ignition Failure 1-23
1.7.2 Improper Burner Function 1-24
1.7.3 Improper Temperature Control 1-26
1.7.4 Computer Malfunctions 1-26
1.7.5 Filtration Malfunctions 1-27
1.7.6 Leakage 1-29
1.7.7 Basket Lift Malfunctions 1-29
1.7.8 Interpretation of Digital Controller Lights 1-31
1.8 Troubleshooting Guides 1-31
1.8.1 Troubleshooting the 24 VAC Circuit 1-31
1.8.2 Troubleshooting the Gas Valve 1-35
1.8.3 Troubleshooting the Temperature Probe 1-35
1.8.4 Probe Resistance Chart 1-36
1.9 Simplified Wiring Diagrams 1-37
1.9.1 Full-Vat Dual-Spark Module Wiring Diagram 1-37
1.9.2 Full-Vat Single-Spark Module Wiring Diagram (Australia & Pacific Rim) 1-38
1.9.3 Dual-Vat Dual-Spark Module Wiring Diagram 1-39
1.10 Principal Wiring Connections 1-40
1.11 Wiring Diagrams 1-41
1.11.1 Pro H50/55-Series Fryer, Multi-vat, Honeywell 1-41
1.11.1.2 Pro H50/55-Series Fryer, Multi-vat, Fenwal 1-42
1.11.2 Pro H50/55-Series Fryer, Single, Full-vat, Honeywell 1-43
1.11.2.1 Pro H50/55-Series Fryer, Single, Full-vat, Fenwal 1-44
1.11.3 Pro H50/55-Series Fryer, Single, Dual-vat, Honeywell 1-45
1.11.3.1 Pro H50/55-Series Fryer, Single, Dual-vat, Fenwal 1-46
1.11.4 Pro H50/55-Series Fryer, Single, CE, Honeywell 1-47
1.11.4.1 Pro H50/55-Series Fryer, Single, CE, Fenwal 1-48
1.11.4.2 Pro H50/55-Series Fryer, Multi-vat, CE, Fenwal 1-49
1.11.5 Pro H50/55-Series Fryer, Single, FAST-ready, Honeywell 1-50

PRO H50/55-SERIES GAS FRYERS
TABLE OF CONTENTS

1.11.5.1 Pro H50/55-Single w/out Filter, FAST-ready, Fenwal....1-51
1.11.5.2 Pro H50/55-Single w/Filter, FAST-ready, Fenwal....1-52
1.11.5.3 Pro H50/55-Multi-vat, FAST-ready, Fenwal....1-53
1.11.5.4 Pro H50/55-Single w/out Filter, FAST-ready, CE, Fenwal....1-54
1.11.5.5 Pro H50/55-Single w/Filter, FAST-ready, CE, Fenwal....1-55
1.11.5.6 Pro H50/55-Multi-vat, FAST-ready, CE, Fenwal....1-56
1.11.6 Pro H50/55-Series Fryer, Multi-vat Australia....1-57
1.11.7 Pro H50/55-Series Fryer, Single, Australia....1-58
1.11.8 Transformer/Filter Boxes....1-59
1.11.8.1 MPH150/155 Transformer/Filter Box....1-59
1.11.8.2 FPH150/155 Transformer/Filter Box....1-59
1.11.8.3 FPPH250/255/450/455 Transformer/Filter Box....1-60
1.11.8.4 FPPH350/355 Transformer/Filter Box....1-61
1.11.9 Modular Basket Lift -100/120V- ***(Prior to Jan. 2023)*** 1-62
1.11.10 Modular Basket Lift - 208/250V- ***(After Feb. 2002)*** 1-63
1.11.11 Modular Basket Lift - H55/H155 - 120V- ***(After Jan. 2023)***....1-64
1.11.12 Modular Basket Lift - H55/H155 - 208/250V- ***(After Jan. 2013)***....1-65
1.11.13 Oil Return/Disposal....1-66

CHAPTER 2: Parts List....
2.1 Accessories....2-1
2.2 Basket Lift Assemblies and Component Parts....2-2
2.2.1 Basket Lift Assemblies and Component Parts - ***(June 1997 to April 2012)*** 2-2
2.2.2 Basket Lift Assemblies and Component Parts - H55/H155 - 120V- ***(After April 2012)*** 2-4
2.2.3 Basket Lift Assemblies and Component Parts - H55/H155 - 208-250V- ***(After April 2022)*** 2-6
2.3 Cabinetry....2-8
2.3.1 Backs, Doors, Flue Caps, Sides, and Top Caps....2-8
2.3.2 Filter Cabinet Bases, Casters, Framing, and Related Components 2-10
2.3.3 Non-Filter Cabinet Bases, Casters, Framing, and Related Components 2-12
2.4 Controllers....2-14
2.5 Drain, Filtration, and Oil Return System Components 2-15
2.5.1 Filtration System Components....2-15
2.5.2 Drain Valves and Associated Components 2-17
2.5.3 Oil Return Line Components 2-19
2.5.4 Oil Return Handle, Oil Disposal and Disposal Hose Components....2-21
2.5.5 Oil Disposal Wand Assembly 2-23
2.5.6 Assembly Wand Plumbing....2-23
2.5.7 Rear Flush Oil Return Components 2-24
2.5.8 Power Shower Assemblies....2-26
2.6 Electronics and Electrical Components....2-27
2.6.1 Component Boxes....2-27
2.6.2 Transformer Boxes....2-29
2.6.3 High-Limit Thermostat and Temperature Probe 2-31
2.7 Frypots and Associated Components....2-32
2.7.1 Full-Vat Frypot Components 2-32
2.7.2 Dual-Vat Frypot Components 2-34
2.8 Gas Supply and Combustion System Components....2-36
2.9 Gas Valves and Associated Components....2-38
2.9.1 Gas Valve Wiring....2-39
2.10 Wiring Assemblies and Harnesses....2-40

2.11 Miscellaneous Connectors and Terminals 2-42

CHAPTER 3: Single H50/55 Unit Unique Parts List
3.1 Filtration System Components 3-1
3.2 Oil Return Components 3-2
3.3 Component Boxes 3-3
3.4 High-Limit Thermostat and Temperature Probe 3-4
3.5 Transformer Boxes 3-5

PRO H50/55-SERIES GAS FRYERS
CHAPTER 1: SERVICE PROCEDURES

1.1 Functional Description

Pro (H50/55) Series gas fryers contain a welded stainless steel frypot that is directly heated by a high efficiency infrared burner system requiring approximately 43% less energy than conventional burners to cook the same volume.

Self-contained combustion chambers (referred to as "burners") are fitted into rails attached to the sides of the frypot, one on each side. Each combustion chamber is fitted with special ceramic tiles that are heated by burning a forced air/gas mixture. The tiles transfer heat to the frypot by means of infrared radiation, providing much more constant and uniform heat dispersion over the surface of the frypot than conventional burners. Because less heat is lost to the atmosphere in the process, compared to "open-burner" designs, less fuel is required to achieve and maintain temperature.

In full-vat units, gas flow to both of the burners is regulated by one electromechanical gas valve. In dual-vat units, each burner has its own valve. All fryers in this series are equipped with 24 VAC gas valve systems and electronic ignition.

1.1.1 Electronic Ignition System

An ignition module mounted in the component box (located behind the control panel) is connected to an ignitor assembly at the burner. The ignition module performs four important functions: it provides fuse protection for the 24-volt circuit, provides an ignition spark, supplies voltage to the gas valve, and proofs the burner flame. The module contains a 4-second time delay circuit and a coil that activates the gas valve. Three types are in use. A closed-box design is used in most fryers, but in some fryers built for export, the module resembles an interface board. A single dual-spark module is used on current production full-vat fryers. All dual-vat fryers use two single-spark modules.

Inside the Ignition Module

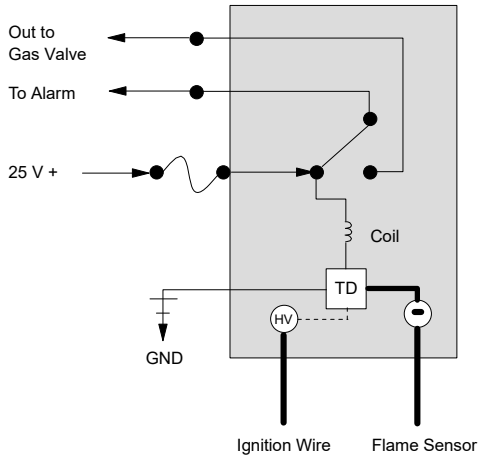

The ignitor assembly consists of a spark plug, an enrichment tube, and a flame sensor.

At start-up, the power switch is placed in the ON position, supplying approximately 12-volts DC to the heat-control circuitry in the controller or computer and to one side of the heat relay coils on the interface board. If resistance in the temperature probe indicates the temperature in the frypot is below 180ºF (82ºC), the current flows through a melt cycle circuit where a timer switch alternately closes for 6 seconds and opens for 24 seconds. If the temperature is 180ºF (82ºC) or above, the current flows through a heat circuit, bypassing the timer switch. In either case, ground is supplied to the other leg of the heat relay coils, which then close electronic switches in the 24 VAC circuit to provide current to the ignition module. Circuitry in the ignition module sends 24 VAC to the gas

valve via a normally closed high-limit switch (and, in fryers with built-in filtration systems, a normally closed drain safety switch). Simultaneously, the module causes the ignitor to spark for 4 seconds to light the burner. A flame sensor verifies the burner ignition by measuring the flow of microamps through the flame. If the burner does not light (or is extinguished), current to the ignition module is cut, the gas valve closes, and the ignition module "locks out" until the power switch is turned off and then back on. A probe monitors the temperature in the frypot. When the programmed setpoint temperature is reached, resistance in the probe causes the heat cycle circuitry in the controller to cut off current flow through the heat relay. This in turn cuts off the 24 VAC to the ignition module, causing the gas valve to close.

1.1.2 Interface Board

The information contained in this section applies to Pro (H50/55) Series gas fryers ONLY.

All fryers in this series have an interface board located in the component box behind the control panel. The interface board provides a link between the controller/computer and the fryer's individual components without requiring excessive wiring, and allows the controller to execute commands from one central point. This standard interface board is also used in a number of fryer types besides the Pro Series.

K2 and K3 are double-pole-double-throw (dpdt) relays that supply 24VAC to the ignition and gas valve circuits, as well as 120VAC to the blower motor. The relays on this board plug into sockets, and if either fails, it can be replaced individually.

LEDs (labeled D1 through D7) are arrayed around the board to assist in troubleshooting.

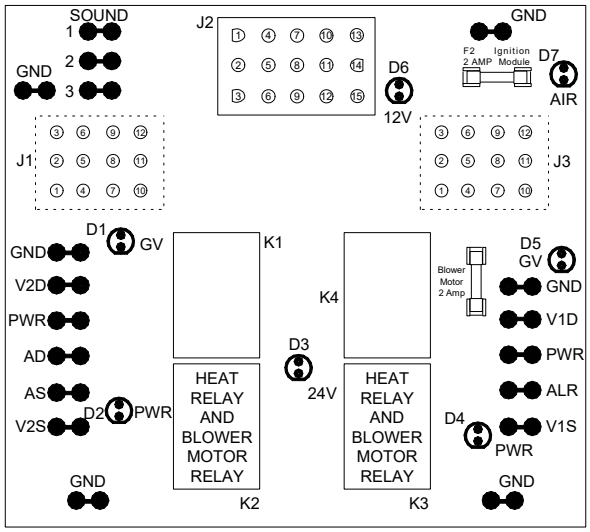

INTERFACE BOARD P/N 106-0386

INTERFACE BOARD LED DIAGNOSTIC LIGHTS	
D1	24 VAC to left gas valve (dual vat only)
D2	24 VAC to left ignition module
D3	24 VAC from transformer
D4	24 VAC to right ignition module
D5	24 VAC to gas valve (right valve if dual vat)
D6	12 VAC from transformer
D7	CE and Japanese units only: air switch closed

NOTE: Although the printing on some boards may indicate 2 Amp fuses, **3 Amp fuses (P/N 807-3843) must be used.** In full-vat fryers, the relay for the left side (K2) may not be present.

The chart on the following page illustrates current flow through the board, and the table at the top of page 1-4 identifies frequently used test points.

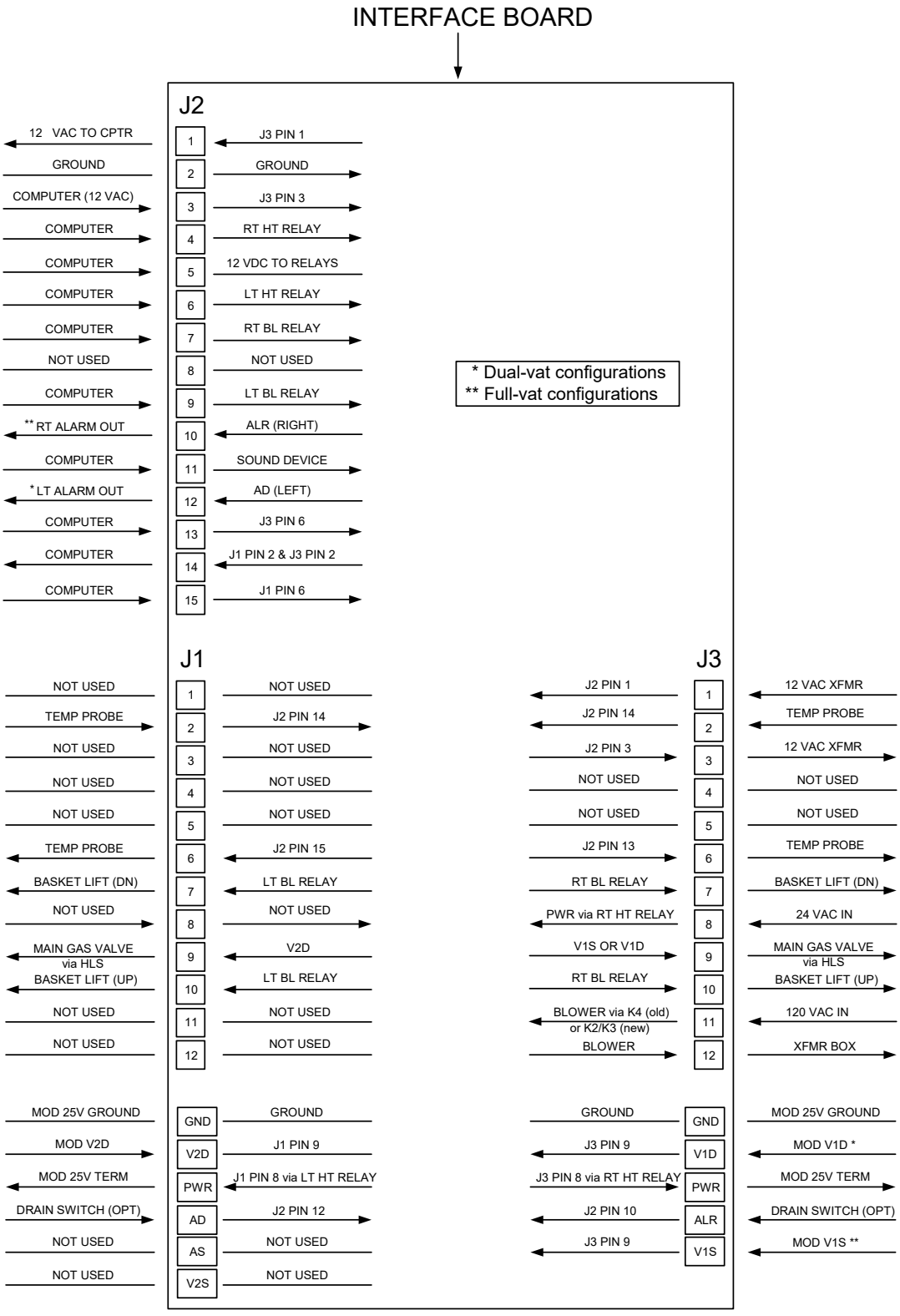

CURRENT FLOW THROUGH INTERFACE BOARD
106-0386 (PRO SERIES APPLICATION)

FREQUENTLY USED TEST POINTS FOR INTERFACE BOARD 106-0386			
TEST	**METER SETTING**	**PINS**	**RESULTS**
12VAC Power to Controller	50VAC Scale	1 and 3 on J3 or J2	12-18
24VAC Power to Right Module	50VAC Scale	8 on J3 and GROUND	22-28
120 VAC Power	250VAC Scale	11 on J3 and GROUND	110-125
120 VAC Power to Blowers	250VAC Scale	12 on J3 and GROUND	110-125
24VAC Power to Full or Right vat High-Limit	50VAC Scale	9 on J3 and GROUND	22-28
24VAC Power to Left High-Limit (if present)	50VAC Scale	9 on J1 and GROUND	22-28
Probe Resistance (Full or Right Vat) *	R x 1000 OHMS	2 and 6 on J3 or 13 and 14 on J2	**
Probe Resistance (Left - if present) *	R x 1000 OHMS	2 and 6 on J1 or 14 and 15 on J2	**
Probe Isolation	R x 1000 OHMS	6 on J1 or J3 and GROUND	***
High-Limit Continuity (Full or Right Vat)	R x 1 OHM	9 on J3 and Wire 13C on Gas Valve	0
High-Limit Continuity (Left - if present)	R x 1 OHM	9 on J1 and Wire 12C on Gas Valve	0
*** Disconnect 15-pin harness from controller before testing probe circuit.** **** See Probe Resistance Chart at the end of the chapter.** ***** 5 mega-Ohms or greater.**			

1.1.3 THERMOSTATS

Pro (H50/55) Series gas fryers have *temperature probes* located on the front centerline of each frypot (dual-vat frypots have two probes, one in each vat). In this type of thermostat, the probe resistance varies directly with the temperature. That is, as the temperature rises, so does resistance, at a rate of approximately 2 ohms for every 1º F. Circuitry in the controller monitors the probe resistance and controls burner firing when the resistance exceeds or falls below programmed temperatures (setpoints). The temperatures are programmed by means of a keypad on the face of the controller.

Pro (H50/55) Series fryers are also equipped with a *high-limit thermostat.* In the event that the fryer fails to properly control the oil temperature, the high-limit thermostat prevents the fryer from overheating to flash point. The high-limit thermostat acts as a normally closed power switch that opens when exposed to temperatures above 425ºF to 450ºF (218ºC to 232ºC). The different types of thermostats have different part numbers for CE and non-CE models and are not interchangeable.

1.2 Accessing Fryers for Servicing

⚠ DANGER

Moving a fryer filled with cooking oil may cause spilling or splattering of the hot liquid. Follow the draining instructions in Chapter 4 of the Installation and Operation manual (P/N 819-5991) before relocating a fryer for servicing.

1. Shut off the gas supply to the unit. Unplug the power cords. Disconnect the unit from the gas supply.

2. Remove any attached restraining devices and relocate the fryer for service accessibility.

3. After servicing is complete, reconnect the unit to the gas supply, reattach restraining devices, and plug in the electrical cords.

1.3 Cleaning the Gas Valve Vent Tube

1. Set the fryer power switch and the gas valve to the OFF position.

2. Carefully unscrew the vent tube from the gas valve. **NOTE:** The vent tube may be straightened for ease of removal.

3. Pass a piece of binding wire (.052 inch diameter) through the tube to remove any obstruction.

4. Remove the wire and blow through the tube to ensure it is clear.

5. Reinstall the tube and bend it so that the opening is pointing down.

1.4 Checking the Burner Manifold Gas Pressure

1. **On non-CE fryers only**, ensure that the gas valve knob is in the OFF position.

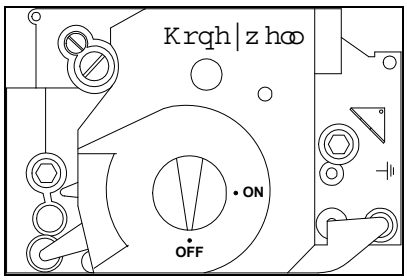

2. Remove the pressure tap plug from the gas valve assembly.

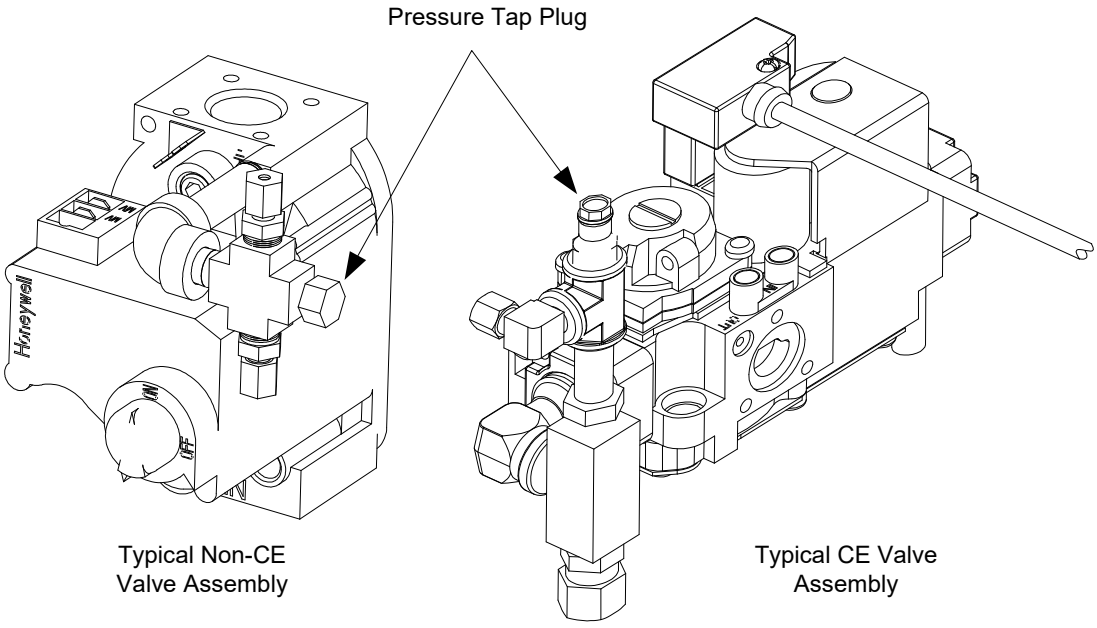

3. Attach a manometer or pressure gauge to the pressure tap hole.

4. **On non-CE fryers only**, place the gas valve in the ON position.
5. Place the fryer power switch in the ON position. When the burner has lit and burned steadily for at least one minute, compare the gas pressure reading to the pressure for the corresponding gas in the appropriate table below. The tables list the burner manifold gas pressures for each of the gas types that can be used with this equipment.

CE Standard
Burner Manifold Gas Pressures

Gas	Pressure (mbar)	
	Single Vat	Dual Vat
Natural Gas Lacq (G20) under 20 mbar	7	7
Natural Gas Gronique * (G25) under 25 mbar	10	10
Natural Gas Gronique (G25) under 20 mbar	10	10
Butane/Propane (G30) at 28/30 or 50 mbar	17	17
Propane (G31) under 37 or 50 mbar	20	20

*** Belgian G25 = 7,0 mbar (single or dual)**

Non-CE Standard
Burner Manifold Gas Pressures

Gas	Pressure
Natural	3" W.C. 0.73 kPa
Propane	8.25" W.C. 2.5 kPa

6. To adjust the burner gas pressure, remove the cap from the gas valve regulator and adjust it to the correct pressure.

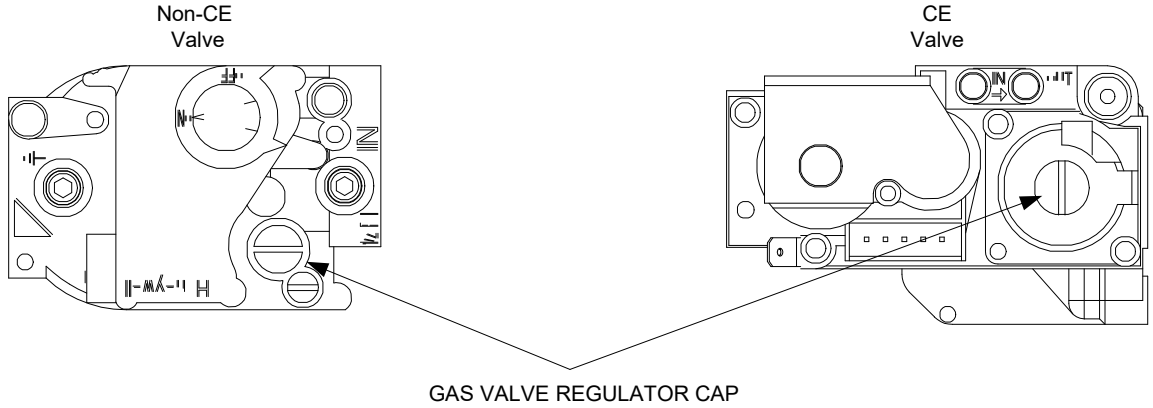

7. Place the fryer power switch (and the gas valve in non-CE fryers) in the OFF position. Remove the fitting from the pressure tap hole and reinstall the pressure tap plug.

1.5 Measuring Flame Current

When the burner flame is properly adjusted, it will produce a current between 2.5 µA and 3.5 µA. Flame current is measured by placing a *microamp* (not milliamp) meter in series with the sensing wire on the ignitor.

1. Place the fryer power switch in the OFF position.

2. Disconnect the sensing wire from one of the burner ignitors and connect it to the positive lead of the meter. Connect the negative lead of the meter to the terminal from which the sensing wire was removed.

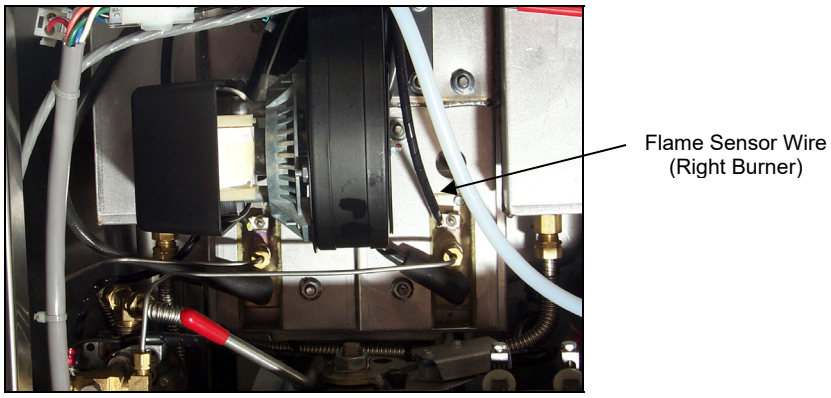

3. Place the fryer power switch in the ON position to light the burners. After the frypot temperature reaches 200°F (93°C), wait at least one minute before checking the reading. **NOTE:** The closer the unit is to normal operating temperature, the more accurate the reading will be.

1.6 Replacing Fryer Components

1.6.1 Replacing the Controller or the Controller Wiring Harness

1. Unplug all electrical power cords.

2. Lift up on the bezel to disengage the tabs on its lower edge from the control panel frame. Slide the bezel down to disengage the upper tabs. Remove the top two screws. Swing the controller out from the top and allow it to rest on its hinge tabs.

3. Disconnect the wiring harness from the back of the controller and, if replacing the harness, disconnect it from the interface board.

4. Disconnect the ground wire from the controller. Remove the controller by lifting it from the hinge slots in the control panel frame.

5. Reverse the procedure to install a new controller or wiring harness. **NOTE:** Ensure that the ferrite bead (black ring) in the harness is at the controller end.

1.6.2 Replacing the Temperature Probe or High-Limit Thermostat

1. Disconnect the fryer from the electrical supply.

2. Drain cooking oil below the level of the probe or thermostat.

3. Lift up on the bezel to disengage the tabs on its lower edge from the control panel frame. Slide the bezel down to disengage the upper tabs. Remove the top two screws. Swing the controller out from the top and allow it to rest on its hinge tabs.

4. Disconnect the controller wiring harness and ground wire from the back of the controller and remove the controller by lifting it from the hinge slots in the control panel frame.

5. If the fryer has a built-in filtration system, remove the cotter pin securing the oil return handle to the oil return operating rod and separate the rod from the handle.

6. Disconnect the ignition cables from the ignitors by grasping the boots and gently pulling toward you.

7. Disconnect the flame sensor wires from the flame sensors.

8. Disconnect the sound device lead from the interface board.

9. If working on the left frypot, cut the wire tie on the wiring bundle and disconnect the main wiring harness 15-pin connector.

10. Remove the component box mounting screws.

11. Rotate the top of the component box out of the frame and carefully pull it out enough to disconnect the wiring harness plug from the back of the box. If the unit is equipped with built-in filtration, disconnect the wires from the filter switch. This will leave one set of wires, enclosed in spiral wrap, connected to the component box.

12. Remove the box and place it on top of the fryer to expose the temperature probe and high-limit thermostat.

13. Cut the leads of the probe or thermostat, as appropriate, near the component and unscrew it from the frypot.

14. Unscrew and remove the temperature probe (or high-limit thermostat) from the frypot.

15. Apply Loctite® PST56765 pipe thread sealant or equivalent to the replacement part threads and screw the replacement part into the frypot, torquing to 180 inch-pounds.

16. Connect the wires from the new component as follows:

    a. If replacing the temperature probe, use a pin pusher to disconnect (one at a time) the red and white leads from the connector and insert the corresponding leads from the new probe.

b. If replacing the high-limit thermostat, use a pin pusher to disconnect the lead running to the connector and insert the corresponding lead from the new thermostat. Disconnect the other lead from the drain safety switch and connect the remaining lead from the new thermostat.

17. Reverse steps 1-12 to reassemble the fryer.

1.6.3 Replacing the Interface Board

1. Disconnect the fryer from the electrical power supply.

2. Lift up on the bezel to disengage the tabs on its lower edge from the control panel frame. Slide the bezel down to disengage the upper tabs. Remove the top two screws. Swing the controller out from the top and allow it to rest on its hinge tabs.

3. Disconnect the wiring harness from the back of the controller and from the interface board, and disconnect the ground wire from the controller.

4. Remove the controller by lifting it from the hinge slots in the control panel frame.

5. Disconnect the wires attached to the interface board, marking or making a note of the wires and terminals to facilitate reconnection.

6. Remove the nuts at each corner of the interface board and carefully pull it from the studs far enough to allow the connector on the back of the board to be disconnected, then remove the board from the box. When removing the board, be careful not to lose the spacers that fit over the studs behind the board.

7. Recover the relay(s) from the failed interface board and install on the replacement board.

8. Reverse the procedure to install the replacement board, being sure that the spacers behind the board are in place.

1.6.4 Replacing an Ignition Module

1. Disconnect the fryer from the electrical supply.

2. Lift up on the bezel to disengage the tabs on its lower edge from the control panel frame. Slide the bezel down to disengage the upper tabs. Remove the top two screws. Swing the controller out from the top and allow it to rest on its hinge tabs.

3. Disconnect the wires from the ignition module, marking or making a note of the wires and terminals to facilitate reconnection.

4. Remove the four ignition module screws and pull the module from the component box.

5. Move the spacers to the new module.

6. Reverse the procedure to install the replacement module.

1.6.5 Replacing an Ignitor Assembly

⚠ DANGER
Drain the frypot or remove the handle from the drain valve before proceeding further.

1. Disconnect the fryer from the electrical supply.

2. Disconnect the flame sensor wire by carefully pulling its push-on terminal from the terminal strip on the ignitor. Disconnect the gas enrichment tube at the ignitor-end compression fitting. Disconnect the ignition cable from the ignitor by grasping its boot and gently pulling toward you.

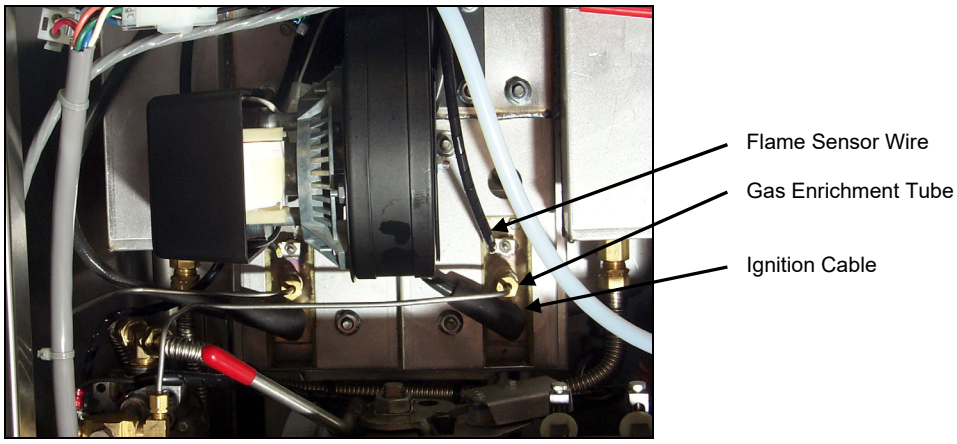

3. Remove the sheet metal screws securing the ignitor to the mounting plate and pull the ignitor from the fryer.

4. Reverse the procedure to install the replacement ignitor.

1.6.6 Replacing or Cleaning a Combustion Air Blower

1. Disconnect the blower wiring harness, remove the blower assembly mounting nuts, and remove the blower assembly from the fryer. If cleaning the motor, continue with Step 2; otherwise, install the replacement blower, reconnect the wiring harness, and then go to Step 6.

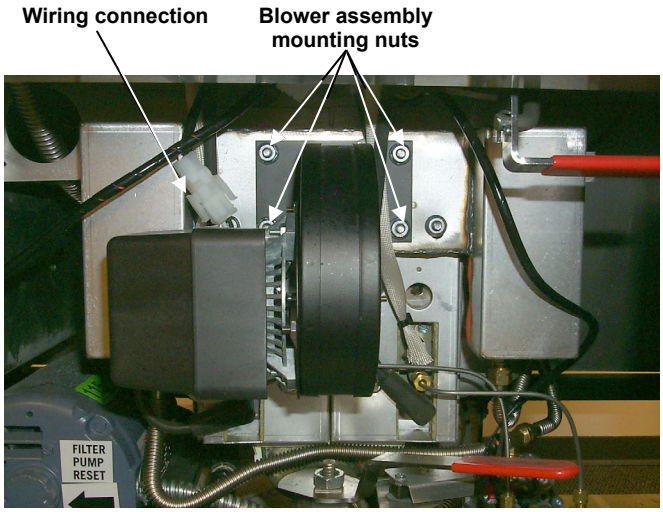

2. Remove the blower motor shield and separate the blower motor from the housing as shown in the illustration on the following page.

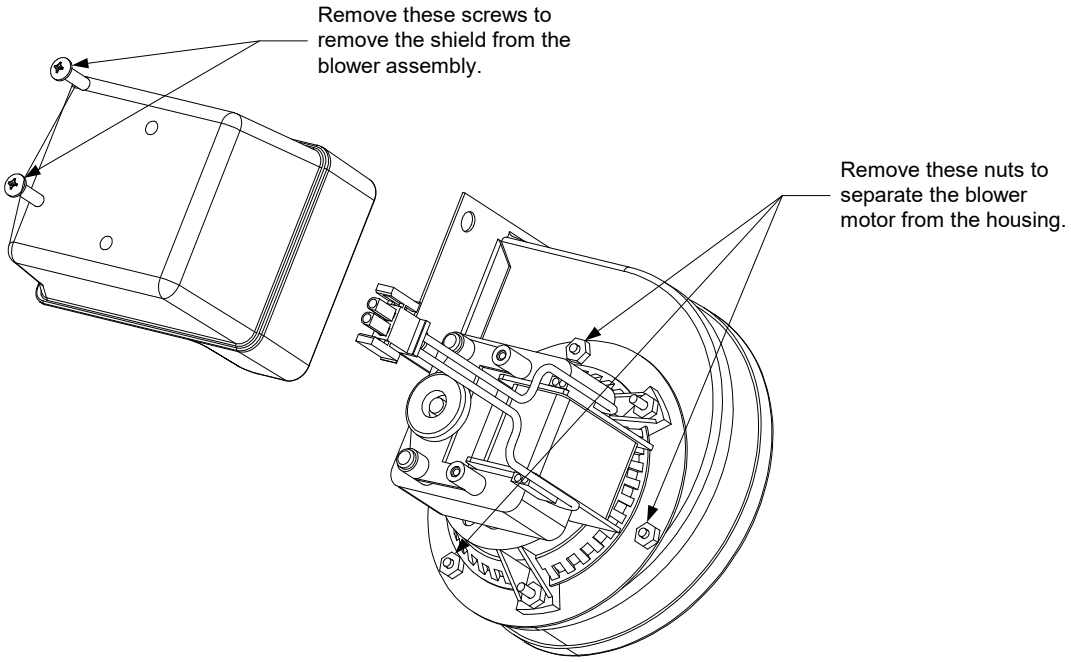

3. Wrap the motor with plastic wrap to prevent water from entering it. Spray degreaser or detergent on the blower wheel and the blower housing. Allow it to soak for five minutes. Rinse the wheel and housing with hot tap water, then dry with a clean cloth.

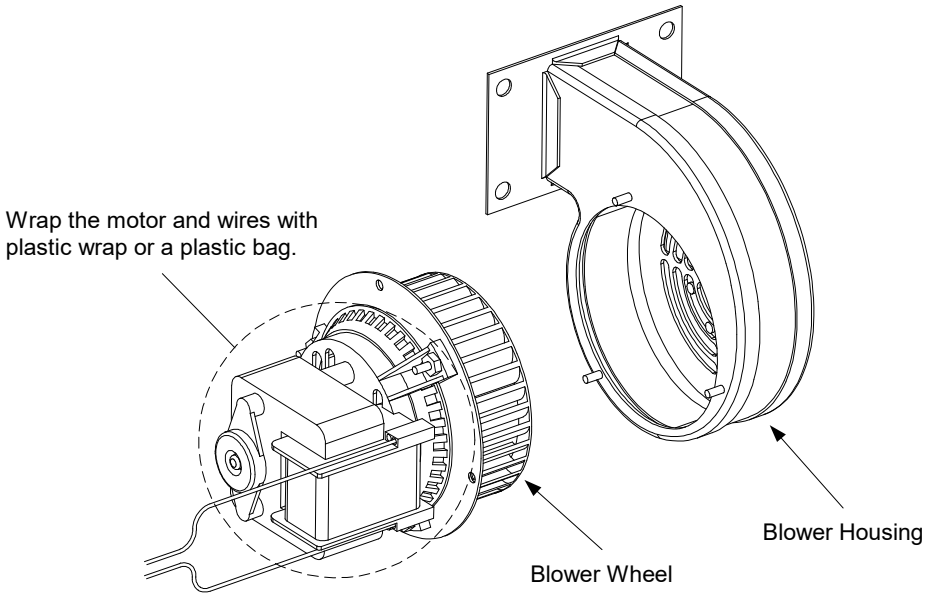

4. Remove the plastic wrap from the blower motor assembly. Reassemble the blower motor assembly and blower housing. Reinstall the blower shield.

5. Reinstall the blower assembly in the fryer and reconnect the wiring disconnected in Step 1.

6. Light the fryer in accordance with the procedure described in Chapter 3, Section 3.2 of the Pro H55-Series Gas Fryer Installation and Operation Manual (P/N 819-5991).

7. After the burners have been lit for at least 90 seconds, observe the flames through the burner sight glasses located on each side of the combustion air blower.

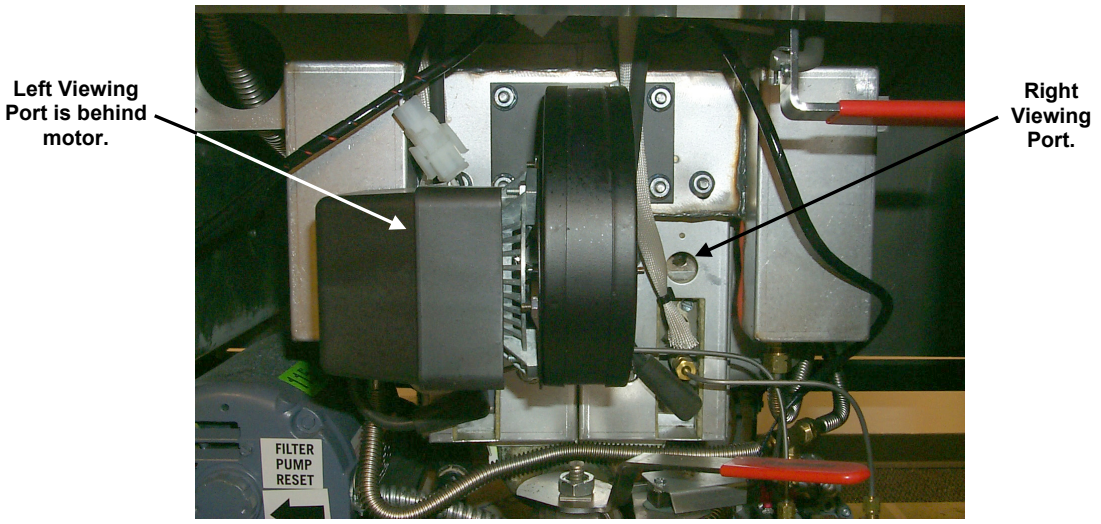

The air/gas mixture is properly adjusted when the burner manifold pressure is in accordance with the applicable table on page 1-6 and the burners display a bright red-orange glow. If a blue flame is observed or if there are dark spots on the burner face, the air/gas mixture requires adjustment.

Adjusting the Air/Gas Mixture

On the side of the blower housing opposite the motor is a shutter plate with a locking nut. Loosen the nut enough to allow the shutter to be moved, then adjust the position of the shutter to open or close the air intake opening until a bright red-orange glow is obtained. Carefully hold the shutter in position and tighten the locking nut.

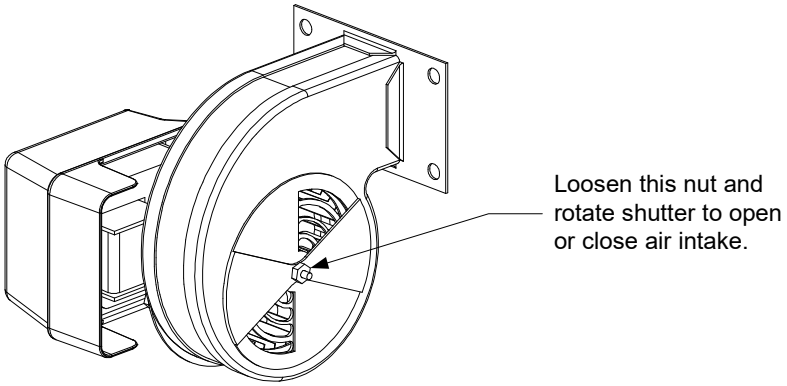

1.6.7 Replacing a Gas Valve

⚠ DANGER
Drain the frypot or remove the handle from the drain valve before proceeding further.

1. Disconnect the fryer from the electrical and gas supplies.

2. Disconnect the drain safety and high-limit thermostat wires from the gas valve. Mark each wire to facilitate reconnection.

3. Remove the vent tube (on non-CE fryers) and the enrichment tube fitting from the valve. Disconnect the flexible gas line(s).

If replacing the left-most valve on any configuration, or the right valve on a two-fryer battery, follow the instructions below. If replacing valves in other positions, skip to "ALL OTHER VALVES."

A. Remove the filter pan from the unit. Remove the door adjacent to the valve being replaced.

B. Remove the five screws on the front face of the pan rail assembly adjacent to the valve being replaced. Remove the nut and bolt securing the rear end of the rail to the cabinet.

C. Remove the two nuts and bolts immediately behind the front face of the pan rail assembly. Pull the assembly from the unit to gain access to the pipe union on the gas line.

D. Uncouple the pipe union and remove the gas valve and associated piping from the unit.

E. Remove the fittings and associated piping from the failed valve and install them on the replacement valve using Loctite® PST56765 or equivalent pipe thread sealant.

F. Reconnect the gas valve assembly to the fryer using Loctite® PST56765 or equivalent pipe thread sealant, and reattach the flexible gas line(s), enrichment tube(s), and the vent tube (on non-CE units). Reconnect the high-limit thermostat wires and drain safety wires to the valve.

G. Reconnect the fryer to the gas supply and open the cut off valve. Apply a solution of soapy water around each connection to check for gas leaks. Eliminate any that are found.

H. Position the pan rail assembly beneath the fryer and rest the rear end of the rail on the cabinet frame. Install the two nuts and bolts behind the front face of the rail, but do not tighten them. Install the nut and bolt at the rear end of the filter rail and tighten securely.

I. Install the five screws in the front face of the rail, but do not tighten them. Install the filter pan in the unit to make sure that all components are properly aligned; then, securely tighten the remaining bolts and screws.

J. Reconnect the fryer to the electrical power supply and check for proper operation. When proper operation has been verified, reinstall the door removed in Step A.

ALL OTHER VALVES

4. Carefully unscrew the valve from the manifold. **NOTE:** Some models may have the valve attached to the manifold by means of a pipe union. In such cases, remove the valve by uncoupling the union.

5. Remove all fittings from the old gas valve and install them on the replacement valve, using Loctite® PST56765 or equivalent pipe thread sealant.

6. Reconnect the gas valve assembly to the fryer using Loctite® PST56765 or equivalent pipe thread sealant, and reattach the flexible gas line(s), enrichment tube(s), and the vent tube (on non-CE units). Reconnect the high-limit thermostat wires and drain safety wires to the valve.

7. Reconnect the fryer to the gas supply and open the cut off valve. Apply a solution of soapy water around each connection to check for gas leaks. Eliminate any that are found.

8. Reconnect the fryer to the electrical power supply and check for proper operation.

1.6.8 Replacing a Burner Assembly

⚠ DANGER
Drain the frypot or remove the handle from the drain valve before proceeding further.

1. Disconnect the unit from the electrical and gas supplies.

2. Remove the combustion air blower by following the instructions in Section 1.6.6.

3. Remove the four nuts from the air plenum assembly and pull the assembly straight out toward you until it clears the burner tubes.

   NOTE: On a dual-vat fryer, it will be necessary to remove the drain valve handles before the plenum can be removed.

   NOTE: If the flexible oil return lines are blocking the plenum, carefully bend them upward enough to clear the plenum.

4. Disconnect the ignition cable from the ignitor by grasping its boot and pulling gently toward you. Disconnect the flame sensor wire from the ignitor by gently pulling its push-on terminal from the terminal strip on the ignitor.

5. Disconnect the flexible gas lines from the burner orifice and the enrichment tube from the ignitor assembly.

6. Remove the four ¼-inch nuts securing the outer front covers to the frypot assembly.

7. Remove the sheet metal screws at the top of the outer front covers and pull the covers straight out toward you until clear of the mounting studs.

8. Remove the washers and tubular spacers from the mounting studs, then pull the inner covers straight out toward you until clear of the mounting studs.

9. Grasp the burner firmly and pull it toward you until it clears the burner channels, taking care not to damage the ceramic tiles in the process.

10. Clean all debris from the burner channels and combustion area.

11. Inspect the upper and lower burner rails for cracked or burned out welds.

    a. If the welds in the lower rail are cracked or burned out, the frypot must be replaced. Refer to Section 1.6.10 for instructions.

    b. If the welds in the upper rail are cracked or burned out, the upper rail must be replaced. Refer to Section 1.6.11 for instructions.

12. Place a new insulating strip along the top, rear, and bottom edge of the burner and carefully slide it straight into the rails. **NOTE:** Use P/N 826-0931 for full-vat frypots and P/N 826-0932 for dual-vat frypots.

13. Reverse steps 1 through 9 to reassemble the components.

14. Fill the frypot with oil. Turn the fryer on, turn off or bypass the melt cycle, and operate the unit for at least 10 minutes.

15. Visually examine the burner flame. The color and intensity on both sides should be the same.

16. Use an inspection mirror to check for leaks in areas that cannot be directly observed.

17. If a leak is detected, tighten all the lower insulation retainer nuts, allow the frypot to run for five additional minutes, and repeat steps 15 and 16.

18. If the leak persists, use a rubber hammer and a small block of wood to tap the corners of the lower combustion chamber insulation retainers. Repeat steps 15 through 17. **Repeat this step until no leakage is detected.**

1.6.9 Replacing the Filter Motor, Filter Pump, or Filter Pump Solenoid Valve

1. Disconnect the unit from the electrical power supply.

2. Remove the filter pan from the unit and drain the frypots into a Shortening Disposal Unit (SDU) or other appropriate metal container.

⚠ DANGER
DO NOT attempt to drain more than one full frypot or two split frypots into the SDU at one time.

3. Position a container beneath the oil return fitting at the front of the cabinet. Disconnect the flexible oil line from the fitting, allowing any residual oil to drain into the container.

4. At the rear of the fryer, unplug the left connector (as viewed from the rear of the fryer) from the transformer box. Using a pin pusher, push the pump solenoid valve wires from Pins 7 and 9.

5. Remove the four nuts and bolts attaching the motor mount to the rear motor mount support.

6. At the front of the fryer, remove the cover plate from the front of the motor and disconnect the motor wires.

7. Place a 1-foot (30.5-cm) length of wood (or similar support) beneath the motor mount near the front of the unit and remove the two remaining nuts and bolts attaching the motor mount to the front cabinet cross-brace.

8. Carefully remove the support and lower the motor mount to the floor, allowing the rear of the mount to slide forward and off the rear motor mount support.

9. Disconnect the Power Shower flexline (if applicable) or the oil return flexline from the pump. The motor and pump assembly can now be pulled from beneath the fryer and the failed component can be removed and replaced.

10. Position the new/repaired motor and pump assembly beneath the fryer and reconnect the Power Shower flexline (if applicable) or the oil return flexline to the pump. Lift the rear of the motor mount up and onto the rear motor mount support.

11. Lift the front of the motor mount up and support it with a 1-foot (30.5-cm) piece of wood or a similar support. Install but do not tighten the two nuts and bolts that attach the motor mount to the front cabinet cross-brace.

12. Install and tighten the four nuts and bolts that secure the motor mount to the rear motor mount support. Reconnect the solenoid valve wires to Pins 7 and 9 of the 9-pin connector (polarity does not matter) and reconnect the plug.

13. At the front of the fryer, tighten the two nuts and bolts at the front of the motor mount. Reconnect the motor power wires and reinstall the wiring cover plate.

14. Reconnect the oil return flexline and reinstall the filter pan.

15. Reconnect the unit to the electrical power supply, fill the frypots with oil, and check for proper operation.

1.6.10 Replacing the Frypot

1. Disconnect the fryer from the electrical and gas supplies.

2. Remove the filter pan from the unit and drain the frypots into a Shortening Disposal Unit (SDU) or other appropriate metal container.

⚠ DANGER
<u>DO NOT</u> attempt to drain more than one full frypot or two split frypots into the SDU at one time.

3. Dismount the topcap by removing the screws on the bottom of each front corner and lifting the topcap straight up.

4. Remove the bezels by lifting them up to disengage the tabs along the lower edges from the slots in the control panel frame.

5. Grasp the upper edge of each controller and swing the controller downward. Unplug the controller wiring harness and grounding wire from the back of each controller.

6. Remove the controllers by lifting them from the hinge slots in the control panel frame.

7. Remove the cotter pin that secures the oil return rod to the oil return handle and separate the rod and handle. **NOTE**: On split-vat units, there are two oil return handles.

8. Disconnect the sound device wire from the interface board and disconnect the oil return switch wires from the switch terminals.

9. Disconnect the flame sensor wires by carefully pulling the push-on terminals from the terminal strips on the ignitors. Disconnect the gas enrichment tube at the ignitor-end compression fitting. Disconnect the ignition cables from the ignitors by grasping the boots and gently pulling toward you.

10. Remove the two mounting screws on each side of the component box and rotate the top of the box out of the frame. Carefully pull it out enough to disconnect the wiring harness connector from the back of the box. Cut any ties that prevent the box from being pulled out of the control panel frame.

11. Carefully pull the box clear of the frame and rest it on the top of the fryer.

12. Using a pin pusher, remove the temperature probe and high-limit thermostat wires from the plugs or terminals, marking each wire to facilitate re-assembly.

13. Remove the cover from the safety drain switch. Disconnect the wires from the switch.

14. Remove the section(s) of drain from the drain valve(s) of the frypot to be removed.

15. Disconnect the gas lines from the burner orifices and ignitor assemblies.

16. Remove the frypot hold down bracket.

17. Remove the screws in the back panel and inside the flue cap at each end that secure the flue cap to the fryer and lift it clear of the fryer.

18. Disconnect the oil return line(s) from the frypot to be removed.

19. Carefully lift the frypot from the fryer cabinet.

20. Remove the drain valve(s), temperature probe(s), high-limit thermostat(s), and ignitor assemblies. Inspect each of these components carefully and install them in the replacement frypot if they are in serviceable condition. Use Loctite® PST56765 sealant or equivalent on component threads.

    NOTE: Some servicers, based upon their experience, recommend replacing probes and thermostats whenever a frypot is replaced; however, this remains the customer's decision.

21. Reverse steps 1-19 to reassemble fryer.

    NOTE: Care should be taken not to over-torque nuts on frypots made of 439 stainless steel, as this could tear the material. One turn past hand-tight is sufficient torque.

22. Perform steps 14 through 18 of Section 1.6.8 to ensure that there are no leaks in the burner insulation.

⚠ CAUTION
Before installing temperature probe, high-limit thermostat, and drain valve on replacement frypot, clean the threads and apply Loctite® PST56765 thread sealant or equivalent.

1.6.11 Replacing Frypot Insulation and/or Upper Burner Rails

NOTE: Replacing the burner rails requires completely tearing down the frypot and installing new frypot insulation. See the referenced illustrations for component identification.

To remove the old insulation and/or upper burner rails (use illustration on page 1-20):

1. Remove the frypot according to the instructions in Section 1.6.10.
2. Remove the burner assemblies (1).
3. Remove insulation retainers and blanket insulation (2).
4. Remove the upper oil zone insulation bracket and upper oil zone insulation (3).
5. Remove the plenum (4).
6. Remove the front lower combustion chamber insulation retainer and insulation (5), and the front lower combustion chamber inner insulation retainer and insulation (6). **NOTE:** Full-vat units have two-piece insulation retainer and insulation components. Dual-vat units have one-piece components.
7. Remove the upper combustion chamber insulation retainer and insulation (7).
8. Remove the inner upper combustion chamber insulation retainer and insulation (8).
9. Remove the rear lower combustion chamber retainers, back, and insulation (9). **NOTE:** Full-vat units have two-piece backs and four retainers. Dual-vat units have one-piece backs and two retainers.
10. Remove the flue assembly (10).
11. Remove the upper burner rails (11).
12. Remove any residual insulation, sealant, and/or oil from the exterior of the frypot.

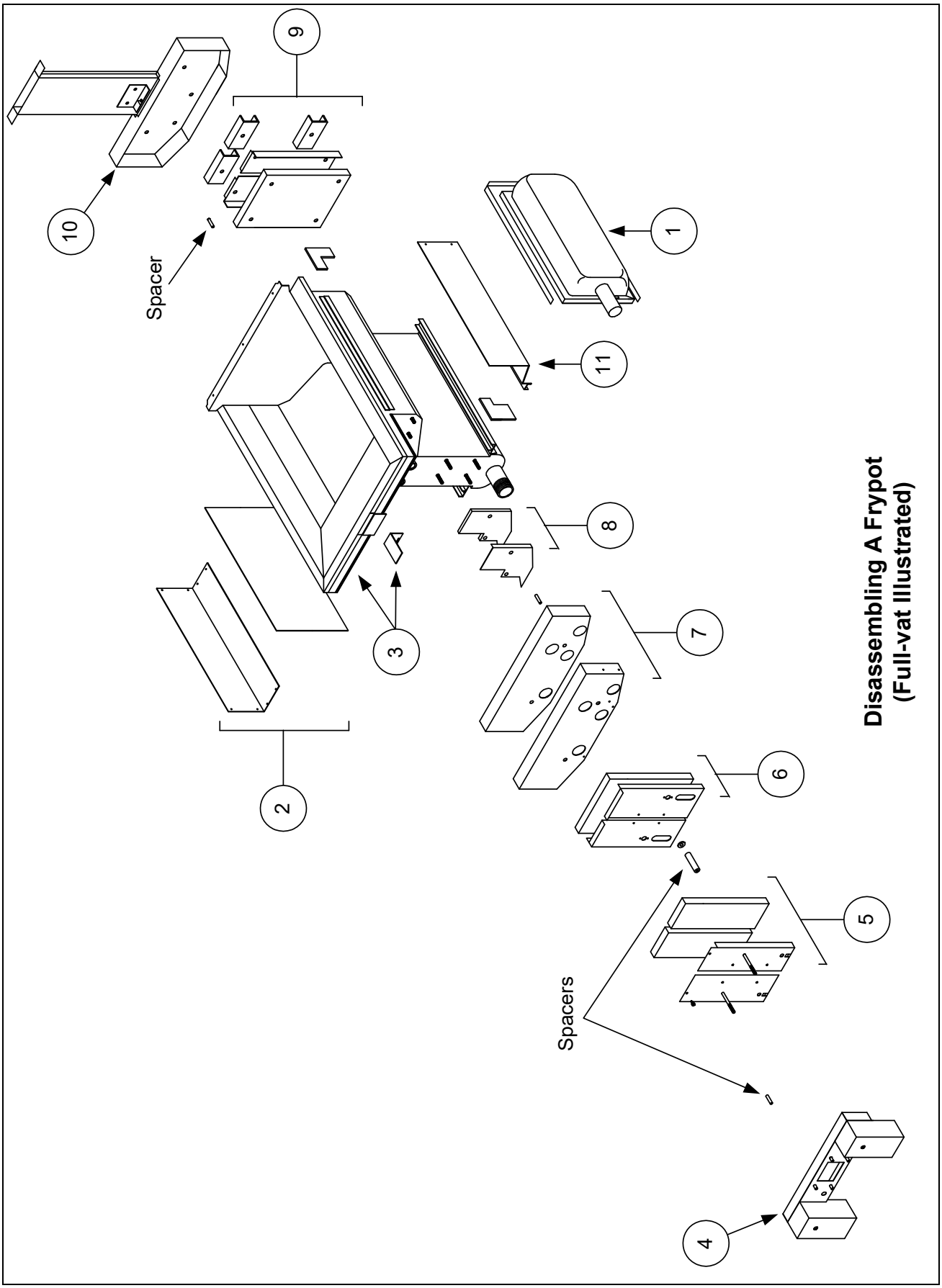
Disassembling A Frypot
(Full-vat Illustrated)
1
2
3
4
5
6
7
8
9
10
11
Spacer
Spacers

To re-assemble with new insulation and/or upper burner rails (use illustration on page 1-23):

13. Place the "L" shaped pieces of combustion chamber insulation (1) in the front and rear corners of both upper rail-retaining slots.

14. Use a small amount of furnace or muffler repair cement to seal the gaps at each end of both lower rails.

15. Install the upper burner rails (2) with the heat deflectors slanting toward the rear of the frypot. The rails will cover the "L" shaped pieces of combustion chamber insulation previously installed.

16. Place the upper inner combustion chamber insulation and insulation retainers (3) on the top two studs on each side of the front of the frypot and secure with ¼"-20 washer-nuts. *It is normal for the retainers to slice off the overhanging insulation.*

17. Place the lower rear combustion chamber insulation (4) on the lower four studs at the rear of the frypot.

18. Place one 1.625-inch tubular spacer (5) on each of the flue assembly (upper) studs at the rear of the frypot. **NOTE:** There are three different sizes of spacers. Verify the size to ensure the correct spacers are installed.

19. Press the flue assembly (6) over the burner rails. It may be necessary to use a rubber mallet or screwdriver to align the components. Use four ¼"-20 washer nuts to secure the flue assembly. **Do not tighten the retainer nuts at this point. They should be finger-tight only. NOTE:** The flue edge will cover one to two inches of the lower insulation.

20. Install the lower rear combustion chamber back(s) and retainer(s) (7) with the flanged edge(s) against the flue. Secure with ¼"-20 washer nuts. **NOTE:** Full-vat units have two-piece backs and four retainers. Dual-vat units come with one-piece backs and only two retainers.

21. Insert the burners (9) into the rails to ensure the rail spacing and alignment are correct. The burner should slide freely into and out of the rails. The upper rail can be bent slightly to increase or decrease tension on the burner and the edges of the slot can be closed or opened slightly to best fit the burner frame.

22. Carefully wrap a strip of burner insulation (8) tightly around the rear and sides of the burner frame (9), with the glass-tape side of the strip on the outside. **Do not use duct tape or adhesive to secure the strip to the burner frame.**

23. Align the burner to the burner rails while maintaining tension on the insulation strip. Insert the burner at a slight angle and begin pushing the burner slowly into the rails until it contacts the rear combustion chamber. The fit should be snug, but not excessively tight.

24. Verify that the burners are flush with the front edge of the burner rails. Remove the excess burner insulation by cutting with a knife or diagonal pliers. **Do not try to tear the insulation!**

25. Insert the upper front insulation (10) into its retainer (11), making sure that the holes in each piece are aligned with one another. Install the assembly with the insulation side toward the frypot and secure with ¼"-20 washer-nuts. **Do not over tighten.**

26. Place a washer on each of the four lower studs on the front of the frypot. Install the lower inner front insulation (12) with the rectangular openings toward the drain valve nipple. Install the lower inner front insulation retainer(s) (13). **NOTE:** Full-vat units have a two-piece insulation retainer. Dual-vat units have a one-piece retainer.

27. If necessary, replace the sight-glasses and insulation (14).

28. Place one washer and one 1.888-inch spacer (15) on each stud. **NOTE:** There are three different sizes of spacers. Verify the size to ensure the correct spacers are installed.

29. Insert the front lower insulation (16) into the front lower insulation retainer(s) (17) and install assembly on frypot. Secure with ¼"-20 washer-nuts. If frypot uses two retainers, connect them together with two ¼" self-tapping screws. **NOTE:** Full-vat units have a two-piece insulation retainer and two pieces of insulation. Dual-vat units have one-piece components.

30. Return to the rear of the frypot and fully tighten all washer-nuts.

31. Remove and replace the plenum gaskets (18).

32. Place a 0.938-inch spacer (19) on the plenum-mounting studs, and mount the plenum (20). Ensure the gaskets are clear of the burner tubes by pulling the plenum back slightly. Place a washer on each stud and secure plenum with ¼"-20 lock-nuts.

33. Install the upper oil-zone insulation (21) by pressing it under the upper combustion chamber metalwork. Secure the insulation with the bracket (22) and ¼" self-tapping screws.

34. Install the upper burner rail blanket insulation (23). Position any excess insulation toward the top of the frypot. Avoid overhang past the bottom of the upper burner rail. Overhang in this area will make future burner replacement more difficult.

35. Cover the insulation with the insulation retainer (24), and secure with ¼" self-tapping screws.

36. Reinstall probes, drain valves, high-limit thermostats, and other pipefittings using Loctite® PST56765 sealant or equivalent on the threads.

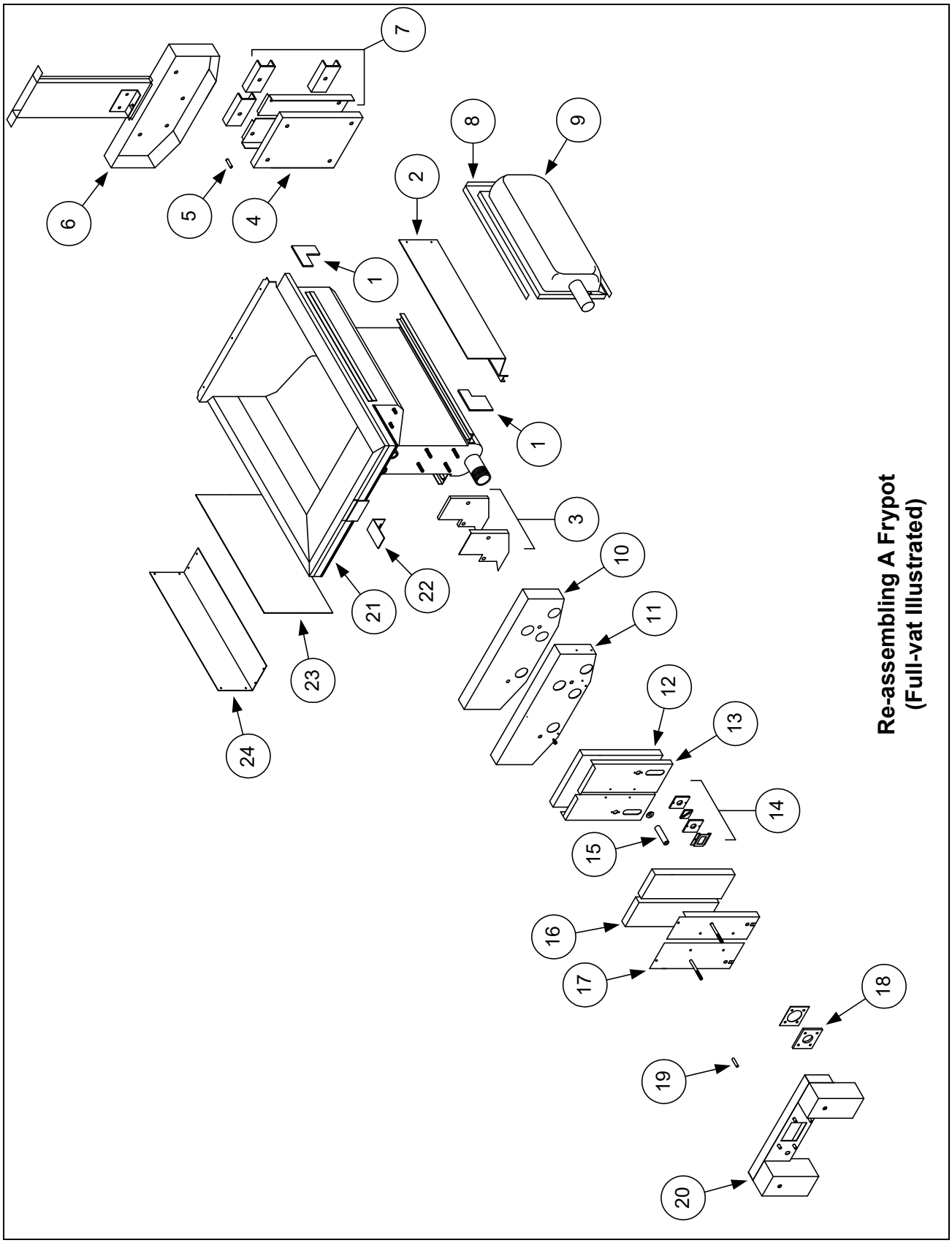
Re-assembling A Frypot
(Full-vat Illustrated)
1
2
3
4
5
6
7
8
9
10
11
12
13
14
15
16
17
18
19
20
21
22
23
24

1.7 Troubleshooting and Problem Isolation

Because it is not feasible to attempt to include in this manual every conceivable problem or trouble condition that might be encountered, this section is intended to provide technicians with a general knowledge of the broad problem categories associated with this equipment, and the probable causes of each. With this knowledge, the technician should be able to isolate and correct any problem encountered.

Problems you are likely to encounter can be grouped into seven categories:

1. Ignition failure
2. Improper burner function
3. Improper temperature control
4. Computer malfunctions
5. Filtration malfunctions
6. Leakage
7. Basket lift malfunctions.

The probable causes of each category are discussed in the following sections. A series of Troubleshooting Guides is also included at the end of the chapter to assist in solving some of the more common problems, including the interpretation of digital controller lights.

1.7.1 Ignition Failure

Ignition failure occurs when the ignition module fails to sense a flame within the 4-second time delay period and locks out. When this happens, the module sends 24 VAC through the interface board alarm circuit to the controller/computer.

Analog controllers indicate ignition failure by illuminating the heat light and trouble light simultaneously. Digital, Computer Magic III.5, and Basket Lift Timer controls display "K H O s."

The three primary reasons for ignition failure, listed in order of probability, are problems related to:

1. Gas and/or electrical power supplies
2. Electronic circuits
3. Gas valve.

PROBLEMS RELATED TO THE GAS AND/OR ELECTRICAL POWER SUPPLIES

The main indicators of this are that an entire battery of fryers fails to light and/or there are no indicator lights illuminated on the fryer experiencing ignition failure. Verify that the quick disconnect fitting is properly connected, the fryer is plugged in, the main gas supply valve is open, and the circuit breaker for the fryer electrical supply is not tripped.

PROBLEMS RELATED TO THE ELECTRONIC CIRCUITS

If gas and electrical power are being supplied to the fryer, the next most likely cause of ignition failure is a problem in the 24 VAC circuit. Verify that the drain valve is fully closed. The valve is attached to a microswitch that must be closed for power to reach the gas valve (often, although the

valve handle appears to be in the closed position, the microswitch is still open). If the valve is fully closed, refer to the troubleshooting guide, **TROUBLESHOOTING THE 24 VAC CIRCUIT**.

Some typical causes of ignition failure in this category include a defective sensing wire in the ignitor assembly, a defective module, a defective ignition wire, and a defective ignitor.

Occasionally you may encounter an ignition failure situation in which all components appear to be serviceable and the microamp reading is within specification, but the unit nevertheless goes into ignition failure during operation. The probable cause in this case is an intermittent failure of an ignition module. When the unit is opened up for troubleshooting, the module cools down enough to operate correctly; however, when the unit is again closed up and placed back into service the module heats up and fails.

PROBLEMS RELATED TO THE GAS VALVE

If the problem is not in the 24 VAC circuit, it is most likely in the gas valve. Before replacing the gas valve, refer to **TROUBLESHOOTING THE GAS VALVE**.

1.7.2 Improper Burner Function

With problems in this category, the burner ignites but exhibits abnormal characteristics such as "popping," dark spots on the burner ceramics, fluctuating flame intensity, and flames shooting out of the flue.

"***Popping***" indicates delayed ignition. In this condition, the main gas valve is opening but the burner is not immediately lighting. When ignition does take place, the excess gas "explodes" into flame, rather than smoothly igniting.

The primary causes of popping are:

- Incorrect or fluctuating gas pressure
- Defective or incorrectly adjusted combustion air blower
- Inadequate make-up air
- Heat-damaged controller or ignition module
- Cracked ignitor or broken ignition wire
- Defective ignition module
- Cracked burner tile (typically causes a very loud pop).

If popping occurs only during peak operating hours, the problem may be incorrect or fluctuating gas pressure. Verify that the incoming gas pressure (pressure to the gas valve) is in accordance with the appropriate CE or non-CE Standard found in Section 2.3 of the Pro H55-Series Gas Fryer Installation and Operation Manual (part number 819-5991), and that the pressure remains constant throughout all hours of usage. Refer to Section 1.4, **Checking the Burner Manifold Gas Pressure** in this manual for the procedure for checking the pressure of gas supplied to the burner.

If popping is consistent during all hours of operation, the most likely cause is an insufficient air supply. Check for "negative pressure" conditions in the kitchen area. If air is flowing into the kitchen area, this indicates that more air is being exhausted than is being replenished and the burners may be starved for air.

If the fryer's gas and air supplies are okay, the problem is most likely with one of the electrical components. Examine the ignition module and controller for signs of melting, distortion, and/or discoloration due to excessive heat build-up in the fryer (this condition usually indicates improper flue performance). A melted or distorted ignition module is automatically suspect and should be replaced; however, unless the condition causing excessive heat is corrected, the problem is likely to recur.

Verify that the ignition wire is tightly connected at both ends and free of obvious signs of damage. Again, if damage is due to excessive heat in the fryer, that problem must also be corrected. Check for proper operation by disconnecting the wire from the ignitor (spark plug), inserting the tip of a screw driver into the terminal, and holding the shaft near the frame of the fryer as the power switch is placed in the ON position. A strong, blue spark should be generated for at least 4 seconds.

⚠ DANGER
Make sure you are holding the insulated handle of the screwdriver and not the blade. The sparking charge is approximately 25,000 volts.

Examine the ignitor (spark plug) for any signs of cracking. A cracked ignitor must be replaced.

If all other causes have been ruled out, examine the burner tiles for any signs of cracking. If cracking is found, the burner must be replaced.

Fluctuating flame intensity is normally caused by either improper or fluctuating incoming gas pressure, but may also be the result of variations in the kitchen atmosphere. Verify incoming gas pressure in the same way as for "popping," discussed in the preceding paragraphs. Variations in the kitchen atmosphere are usually caused by air conditioning and/or ventilation units starting and stopping during the day. As they start and stop, the pressure in the kitchen may change from positive or neutral to negative, or vice versa. They may also cause changes in airflow patterns that may affect flame intensity.

Dark spots on the burner tiles are the result of an improper air/gas mixture. Adjust the combustion air blower to reduce the amount of air in the mixture to correct this problem

Flames shooting out of the flue are usually an indication of negative pressure in the kitchen. Air is being sucked out of the burner enclosure and the flames are literally following the air. If negative pressure is not the cause, check for high burner manifold gas pressure in accordance with the procedures in Section 1.4.

An ***excessively noisy burner***, especially with ***flames visible above the flue opening***, may indicate that the gas pressure is too high or that the gas valve vent tube is blocked. If the incoming gas pressure is correct and the vent tube is unobstructed, the gas valve regulator is probably defective.

Occasionally a burner may apparently be operating correctly, but nevertheless the fryer has a ***slow recovery rate*** (the length of time required for the fryer to increase the oil temperature from 250ºF to 300ºF (121ºC to 149ºC)). The primary causes of this include an over-filled frypot, a dirty or out-of-adjustment combustion air blower, low burner manifold pressure, and/or damaged burner tiles. Adding oil to the frypot during the recovery process will also cause a slow recovery rate.
If these causes are ruled out, the probable cause is a misadjusted gas valve regulator. Refer to Section 1.4, **Checking the Burner Manifold Gas Pressure**, for the gas valve adjustment procedure.

1.7.3 Improper Temperature Control

Temperature control, including the melt cycle, is a function of several interrelated components, each of which must operate correctly. The principle component is the temperature probe. Other components include the interface board, the controller, and the ignition module.

Improper temperature control problems can be categorized into melt cycle problems and failure to control at setpoint problems.

MELT CYCLE PROBLEMS

In fryers equipped with analog controls, the melt cycle must be initiated by pressing the melt cycle switch. With all other controllers, initiation of the melt cycle is automatic. Problems may originate from the controller, the temperature probe, or a malfunctioning heat relay on the interface board.

FAILURE TO CONTROL AT SETPOINT

Problems in this category may be caused by the temperature probe, the interface board, or the controller.

1.7.4 Computer Malfunctions

SENSITIVITY OR "*STRETCH AND SHRINK TIME*."

Sensitivity – "stretch time" – is a programmable feature, patented by Frymaster, which increases or decreases the cook time countdown based on variations in the oil temperature from the set point.

The sensitivity for each product button has ten settings (0 through 9). A sensitivity setting of zero will disable the feature (no change in cooking time), while a nine will provide the highest sensitivity or most change. The correct sensitivity for any product is based on the product, its density, the set point temperature, and the customer's own requirements. A chart is provided in the Frymaster Fryer Controllers User's Manual included with your fryer to assist you in setting sensitivity.

RECOVERY TIME

Recovery time – is a method of measuring a fryer's performance. It is the time required for the fryer to increase the oil temperature from 250ºF to 300ºF (121ºC to 149ºC). This range is used as a standard since ambient kitchen temperatures can effect the test if lower ranges are used.

The Computer Magic III.5 performs the recovery test each time the fryer warms up. An operator can view the results of the test any time the fryer is above the 300ºF (149ºC) point by pressing the ☑ button and entering the code 1652. The test results will be displayed in the computer's LED panel in minutes and seconds. The maximum acceptable recovery time for Pro H55-Series gas fryers is two minutes and twenty-five seconds.

COMMON COMPUTER COMPLAINTS

Most problems concerning computers have to do with programming them. There are four common complaints:

1. Fryer constantly displays "KL"

   Cause: Setpoint is incorrect or missing.

   Corrective Action: Press ☑ 1650, enter the correct setpoint using keypad, then press I to lock in the setpoint.

2. Temperature is displayed in Celsius.

   Cause: Computer is programmed to display in Celsius.

   Corrective Action: Turn off computer first. Then press ☑ 1658.

3. Temperature is constantly displayed.

   Cause: Computer is programmed for constant temperature display.

   Corrective Action: Press ☑ 165L.

4. Computer times down too slowly or too quickly.

   Cause: Computer is compensating for oil temperature via the sensitivity setting.

   Corrective Action: Reprogram sensitivity setting for each product. Refer to the appropriate section of the separate Frymaster Fryer Controllers User's Manual furnished with your fryer for the operating instructions for your specific controller and suggested sensitivity settings.

1.7.5 Filtration Malfunctions

The majority of filtration problems arise from operator error. One of the most common errors is placing the filter paper on the bottom of the filter pan rather than over the filter screen.

Whenever the complaint is "the pump is running, but no oil is being filtered," check the installation of the filter paper, including that the correct size is being used. While you are checking the filter paper, verify that the O-rings on the filter pan suction tube are present and in good condition. Missing or worn O-rings will allow the pump to suck air and decrease its efficiency.

If the pump motor overheats, its thermal overload will trip, and the motor will not start until it is reset. If the pump motor does not start, press the red reset switch located on the front of the motor. If the pump then starts, something caused the motor to overheat. It may be just that several frypots in a large battery of fryers were being filtered one after the other and the pump got hot. Letting the pump cool down for at least a half-hour is all that is required in this case. More often, the pump overheated for one of the following reasons:

- Shortening that remained in the pan after previous filtering solidified in the suction tube recess in the bottom of the pan or the suction tube. Adding hot oil to the pan and waiting a few minutes will usually correct this problem. A flexible wire can be used to clean out the suction tube and the recess in the bottom of the pan. **NEVER** use compressed air to blow solidified shortening out of the suction tube!

- The operator attempted to filter oil that was not heated. Cold oil is thicker and causes the pump motor to work harder and overheat.

If the motor hums but the pump does not rotate, there is a blockage in the pump. Incorrectly sized or installed paper will allow food particles and sediment to pass through the filter pan and into the pump. When sediment enters the pump, the gears can bind up and cause the motor to overload, tripping the thermal overload. Solidified shortening in the pump will also cause it to seize, with similar results.

A pump seized by debris or hard shortening can usually be freed by manually moving the gears with a screwdriver or other instrument as illustrated below. **Make sure power to the pump motor is off before trying this.**

1. Disconnect power to the filter system.

2. Remove the input plumbing from the pump.

3. Use a screwdriver to manually turn the gears.

    - Turning the pump gears backwards will release a hard particle and allow its removal.

    - Turning the pump gears forward will push softer objects and solid shortening through the pump and allow free movement of the gears.

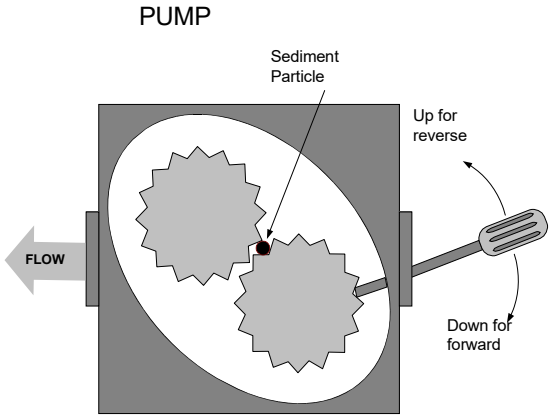

Paper sized or installed incorrectly will also allow food particles and sediment to pass through and clog the suction tube recess on the bottom of the filter pan or the suction tube. Particles large enough to block the suction tube recess or the suction tube may indicate that the crumb tray is not being used.

Possible problems if a Power Shower is installed include clogged openings, shortening solidified in the tubes, missing clean-out plugs, and missing or worn O-rings. Cleaning the unit and replacing missing plugs and missing or worn O-rings will correct these problems.

The electronics of the FootPrint Pro system, illustrated in the schematic at right, are simple and straightforward.

Microswitches, which are attached to handles for each vat and wired in parallel, provide the 24 VAC required to activate the pump relay coil when the handles are moved to the ON position. The activated pump relay coil pulls in the pump motor switch, supplying power to the pump motor.

Verifying Solenoid Operation

Proper operation of the 24 VAC manifold and pump solenoids can be verified by removing the pump motor lead from terminal 4 of the pump motor relay in the filter wiring box and then activating the oil return lever. Proper solenoid operation will be evidenced by an audible "click" or vibration of both the pump solenoid and the manifold solenoid.

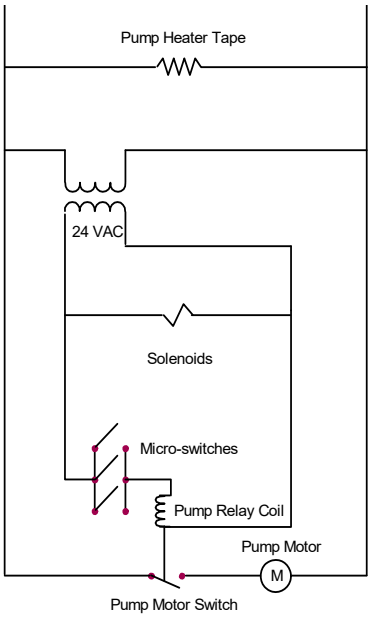

FootPrint Pro Schematic

1.7.6 Leakage

Leakage of the frypot will usually be due to improperly sealed high-limit thermostats, temperature probes, and drain fittings. When installed or replaced, each of these components must be sealed with Loctite® PST56765 sealant or equivalent to prevent leakage. In very rare cases, a leak may develop along one of the welded edges of the frypot. When this occurs, the frypot must be replaced.

If the sides and/or ends of the frypot are coated with oil/shortening, the most likely cause is spillage over the top of the frypot rather than leakage.

The clamps on the rubber boots that hold the drain tube sections together may loosen over time as the tubes expand and contract with heating and cooling during use. In addition, the boot may be damaged. If the section of drain tube connected to the drain valve is removed for any reason, ensure that its rubber and clamps are in good condition and properly fitted around the drain tube when it is reinstalled. Also, check to insure that the drain tube runs downward from the drain along its whole length and has no low points where oil or shortening may accumulate.

1.7.7 Basket Lift Malfunctions

Pro H50/55 Series fryers may be optionally equipped with automatic basket lifts to ensure uniform cooking times. Basket lifts will always come in pairs, although each operates independently of the other. A modular basket lift consists of a toothed rod to which the basket lift arm is attached, a reversible-drive gear motor, and a pair of roller-activated microswitches. A gear on the motor shaft engages teeth in the rod. Depending upon the direction of motor rotation, the gear drives the rod up or down.

Timing circuitry in the controller initiates and stops operation of the basket lift depending upon the variables programmed by the operator. When a product button is pressed, the timing circuitry activates a coil to supply power to the motor, which lowers the basket into the frypot.

When the rod contacts and closes the lower microswitch, power to the motor is cut and the direction of current flow is reversed; this reverses the direction of motor rotation. When the programmed cooking time has elapsed, power is again supplied to the motor. The motor raises the basket from

the frypot until the rod loses contact with the upper microswitch, cutting power to the motor and again reversing the direction of current flow.

Problems with the basket lift can be grouped into three categories:

- Binds and jams
- Motors and gears
- Electronics.

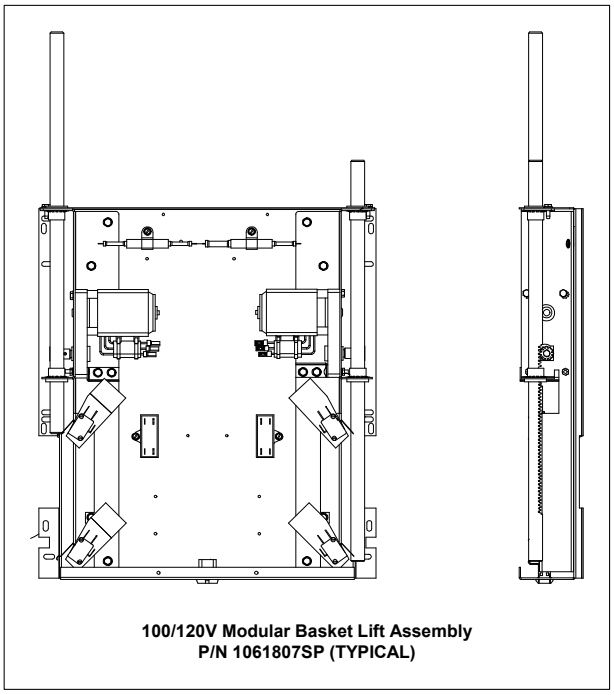

100/120V Modular Basket Lift Assembly
P/N 1061807SP (TYPICAL)

BINDS AND JAMS

Noisy, jerky or erratic movement of the lifts is usually due to lack of lubrication of the rods and bushings. Apply a light coat of Lubriplate® or similar lightweight white grease to the rod and bushings to correct the problem.

Another possible cause of binding is improper positioning of the motor, which prevents the gear from correctly engaging the teeth in the rod. To correct the problem, loosen the screws that hold the motor in place and move it forward or backward until the rod has just enough slack to be rotated slightly.

MOTORS AND GEARS

The most likely problem to be encountered in this category is erratic motion of the lift due to a worn drive gear. Failure to keep the lift rod and bushings properly lubricated will cause unnecessary wear of the gear. Correct the problem by replacing the worn gear.

If the lift cycles correctly but fails to remain in the up position (i.e., goes up, but then slowly settles back down into the frypot), the problem is a failed motor brake. This cannot be repaired and the motor must be replaced.

If power is reaching the motor but the motor fails to run, it is burned out and must be replaced.

ELECTRONICS

Within this category are problems associated with the relays, microswitches, capacitors, resistors, interface board, wiring, and controls. The most common problem in this category is a lift that continuously travels up and down. This is usually caused by a microswitch that is out of adjustment.

Troubleshooting the electronics of the basket lift is the process of verifying current flow through the individual components up to and including the motor. Using a multimeter set to the 250 VAC range, check the connections on both sides of the component for the presence of the applied line voltage. The wiring diagram on the Page 1-38 identifies the components and wiring connection points.

1.7.8 Interpretation of Analog Controller Lights

Power light on, heat light cycling, trouble light off, and melt light on:

- If fryer oil temperature is below 180ºF (82ºC), the lights indicate the unit is operating normally.
- If the oil temperature is above 180ºF (82ºC) and the heat light continues to cycle as if in the melt cycle, this may indicate a defective probe circuit or low incoming 12VAC to the controller.

Power light on, heat light on, trouble light off, and melt light off:

- If the fryer oil temperature is above 180ºF (82ºC) and below the setpoint temperature, the lights indicate the unit is operating properly.
- If the oil temperature is above the temperature set on the control knob and the heat light remains lit, this may indicate a defective probe circuit.

Power light on, heat light off, trouble light on, and melt light off:

- If the fryer oil temperature is below 410ºF (210ºC), the lights indicate one of the following:

  a. The probe circuit is defective, or

  b. There is a connection problem on pins 2 or 10 on the 15-pin wiring harness.

- If the fryer oil temperature is above 410ºF (210ºC), the lights indicate a run-away heating circuit.

1.8 Troubleshooting Guides

The troubleshooting guides on the following pages are intended to assist service technicians in quickly isolating the probable causes of equipment malfunctions by following a logical, systematic process. An additional set of operator troubleshooting guides is contained in Chapter 6 of the Pro H55-Series Installation and Operation Manual (P/N 819-5991). It is suggested that service technicians thoroughly familiarize themselves with both sets.

1.8.1 Troubleshooting the 24 VAC Circuit

Prior to checking for problems associated with the 24 VAC circuit, ensure that the unit is connected to a power supply, the drain valve is fully closed, and the controller is on and is calling for heat (decimal appears between first two digits in controller display).

NOTE: All voltage measurements must be made within **4 seconds** of the unit calling for heat. If unit does not fire within **4 seconds**, ignition modules will lock out and controller must be turned off, then on to reset.

The following processes will assist you in troubleshooting the 24 VAC circuit and ruling it out as a probable cause:

- **24 VAC <u>is not</u> present on the interface board J3 pin 9 (LED 5 (GV)) and, on dual units, on J1 pin 9 (LED 1 (GV)).**

    1. If LED 3 *is not* continually lit, the probable causes are a failed 24 VAC transformer or failed wiring between transformer and interface board.

    2. If LED 3 *is* continually lit, check the right PWR terminal (LED 4) for 24 VAC. On dual units, also check the left PWR terminal (LED 2) for 24 VAC. Also verify that the F2 fuse is good.

        a. If 24 VAC *is not* present, the probable causes are a defective heat relay or a failed interface board.

        b. If 24 VAC *is* present, check for 24 VAC on V1S (or V1D and V2D, if dual unit).

            i. If 24 VAC *is not* present, check the fuses. If they are good, the probable causes are failed ignition module(s) or a failed interface board. Replace the questionable ignition module with one known to be good to isolate the cause.

            ii. If 24 VAC *is* present, the probable cause is a failed interface board.

- **24 VAC <u>is</u> present on interface board J3 pin 9 (LED 5 (GV)) and, on dual units, on J1 pin 9 (LED 1 (GV)).**

    1. If 24 VAC *is not* present across the gas valve main coil (MV terminal), probable causes are an open high-limit thermostat or a failed wire between the interface board and gas valve. Be sure to check both valves on dual units. It may also be caused by a failed drain safety switch.

        Check continuity of high-limit thermostat and drain safety switch. If both are zero, problem is in wiring.

    2. If 24 VAC *is* present across the gas valve main coil (MV terminal), the 24 VAC circuit is working, and the problem may be with the gas valve. Be sure to check both valves on dual units.

24 VOLT CIRCUIT
With Interface Board 106-0386 and
One 807-3366 (FV) Ignition Module

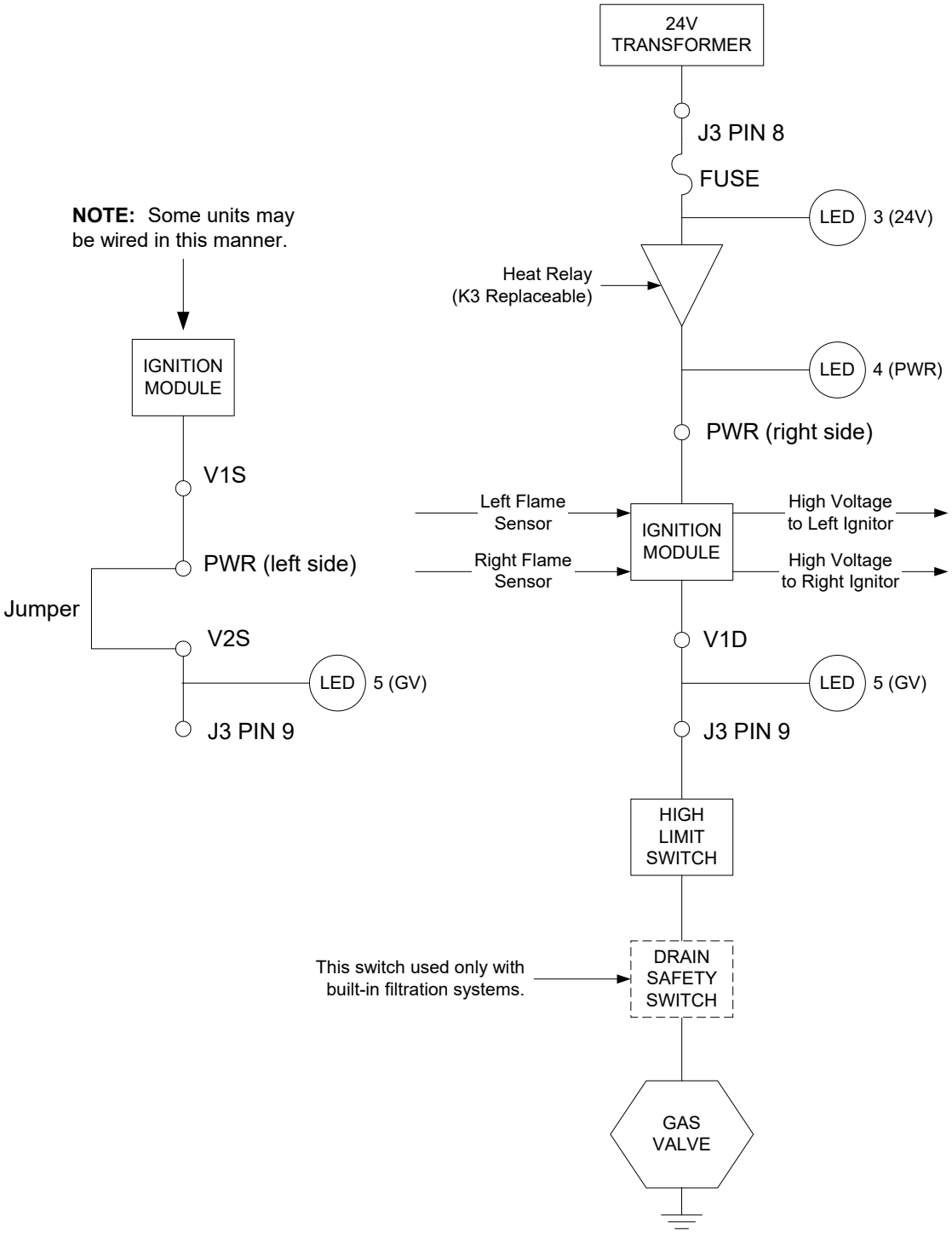

24 VOLT CIRCUIT
With Interface Board 106-0386 and
Two 807-3365 (DV) Ignition Modules

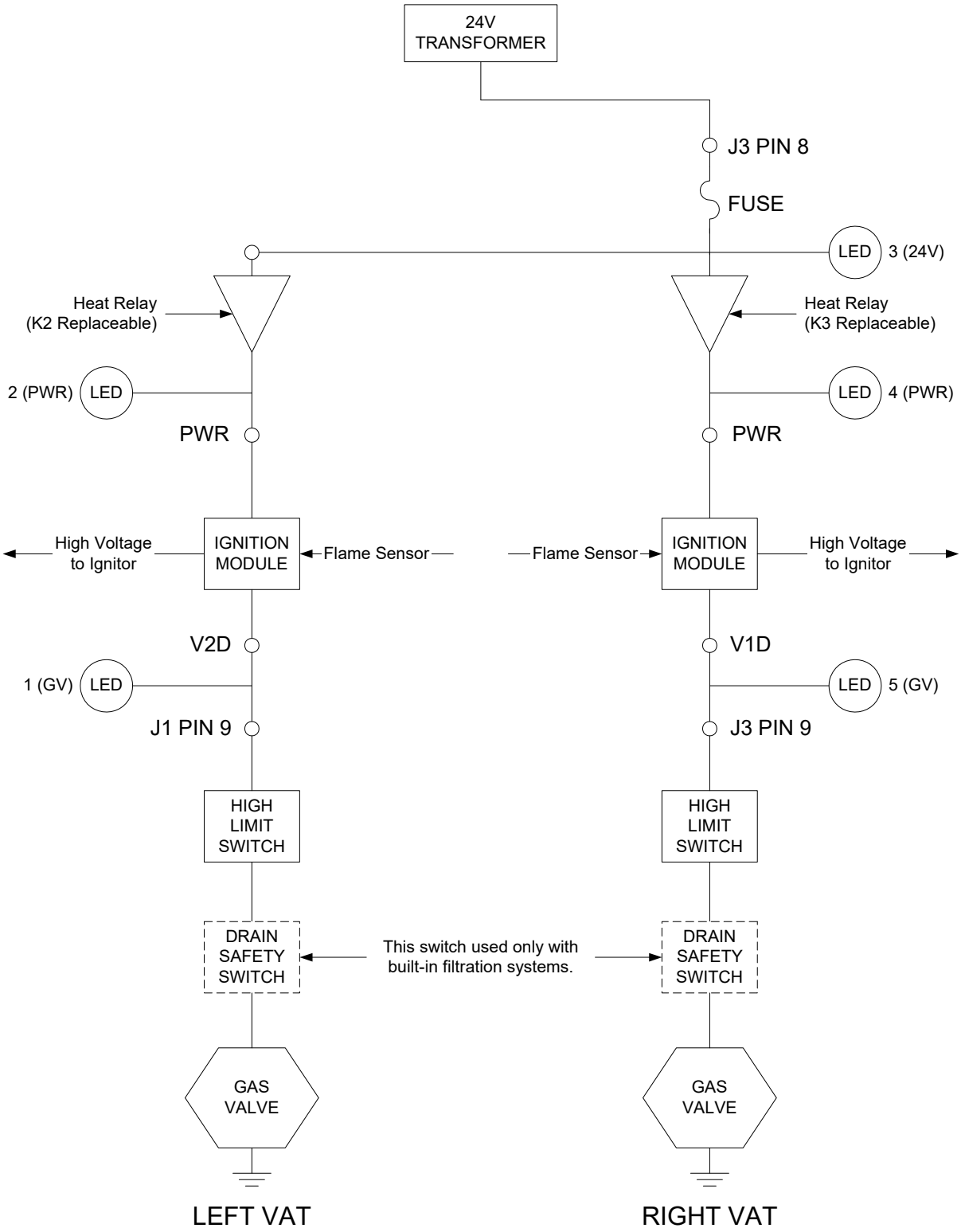

1.8.2 Troubleshooting the Gas Valve

Prior to checking for problems associated with the gas valve, ensure that the unit is calling for heat. Also, for non-CE units, verify that the gas valve is in the ON position.

The following processes will assist you in troubleshooting the gas valve and ruling it out as a probable cause:

- If 24 VAC is not present across gas valve main coil, the probable cause is the 24 VAC circuit. Refer to the 24 VAC circuit troubleshooting guide.

- If 24 VAC is present across gas valve main coil, check the incoming gas pressure and compare to the tables in Section 2.3 of the Installation and Operation manual.

    1. If incoming gas pressure *is not* correct, the probable cause is a problem with the gas supply to fryer.

    2. If incoming gas pressure *is* correct, check the outgoing gas pressure and compare it to the tables on page 2-4 or 2-5 of the Installation and Operation manual.

        a. If outgoing gas pressure *is not* correct, the probable cause is an improperly adjusted or failed gas valve. Adjust the valve by following the procedure "Check Burner Manifold Pressure" in Section 1.4 of this manual.

            If the valve cannot be adjusted, replace it.

        b. If outgoing gas pressure *is* correct, the gas valve is okay.

1.8.3 Troubleshooting the Temperature Probe

Prior to checking for problems associated with the temperature probe, inspect the probe body for damage while it is still in the frypot. Remove and replace the probe if it is bent, dented, or cracked. Also, inspect leads for fraying, burning, breaks, and/or kinks. If found, replace the probe.

The following processes will assist you in troubleshooting the gas valve and ruling it out as a probable cause:

Before testing the probe, unplug the 15-pin connector from the controller to prevent unwanted interference. Determine the temperature the cooking oil using another thermometer or pyrometer placed at the tip of the questionable probe.

- **If resistance through J3 pins 2 and 6 (J1 pins 2 and 6 for left side of dual unit) is not approximately equal to that given in the Probe Resistance Chart for the corresponding temperature, the probe has failed and must be replaced.**

- **If resistance through J3 pins 2 and 6 (J1 pins 2 and 6 for left side of dual unit) is approximately equal to that given in the Probe Resistance Chart for the corresponding temperature, measure the resistance through each of the previously tested pins to ground.**